XYZ-Stages, XY-Stages, Multi-Axis Stages, 6-Axis Stages

M-686 PILine® XY Stage with Piezo Linear-Motor

Fast, Low Profile and Large Aperture with Direct Position Measurement

The M-686.D64 open-frame stage with closed-loop piezo motors provides 25 x 25 mm travel range

- **Integrated Closed-Loop Piezomotor Drives Provide High Speed to 100 mm/s**
- **Travel Ranges 25 x 25 mm**
- **Integrated Linear Encoders with 0.1 µm Resolution**
- **Compact Design: 32 mm Profile Height, 170 x 170 mm Footprint**
- **Clear Aperture 78 x 78 mm, 66 x 66 mm in Extreme Position**
- **Self-Locking at Rest**
- **Compatible with PI Piezo Nanopositioning / Scanning Stages**

M-686 open-frame piezomotor stages are mainly designed for automated positioning applications in microscopy. The optimized form factor with a low profile height of only 32 mm and the standardized mounting pattern allows the combination with many PI standard nanopositioning systems.

Application Examples

- Biotechnology
- Microscopy
- Scanning microscopy
- Confocal microscopy
- Semiconductor testing
- Handling

Space Saving Piezomotors

Compared to conventional motorized translation stages, the M-686 provides a lower profile and smaller footprint. The compact PILine® piezoelectric linear motors and high-resolution linear encoders make both, the lead screw duct and the flanged, bulky stepper motor employed in traditional stages obsolete. In addition, the piezomotors are self-locking at rest and hold the stage in a stable position without heating up.

Compatibility to PI Nanopositioning and Scanning Stages

A number of standard PI piezo flexure stages (150 x 150 mm footprint) can be mounted directly on the M-686 open-frame stage. Depending on the application, these highly specialized, ultra-precise nanopositioning systems are available as fast XY scanners (for fluorescence microscopy), as vertical Z positioners (3D imaging), or with up to 6 degrees of freedom.

Limit and Reference Switches

For the protection of your equipment, non-contact Hall-effect limit and reference switches are installed. The direction-sensing reference switch supports advanced automation applications with high precision.

Advantages of PILine® Micropositioning Systems

The ultrasonic piezoceramic drives used in PIline® micropositioners have a number of advantages over classical drives:

- Higher Accelerations, up to 5 g
- Speeds up to 500 mm/s
- Small Form Factor
- Self-Locking When Powered Down
- No Shafts, Gears or Other Rotating Parts
- Non-Magnetic and Vacuum-Compatible Drive Principle

Notes

Nanopositioning stages that fit directly on the M-686:

P-561 to P-563
PIMars™ XYZ Nanopositioning systems with up to 300 µm travel

P-541.2 to P-542.2
Low-profile microscopy XY scanners

P-541.Z
Low-profile Z/tip/tilt piezo nanopositioning stages for microscopy

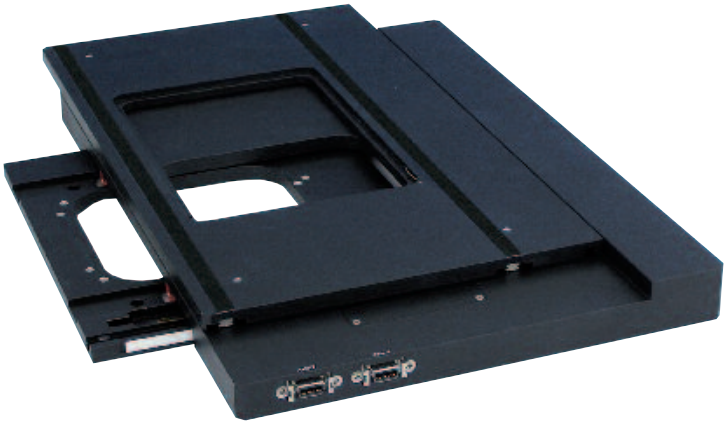

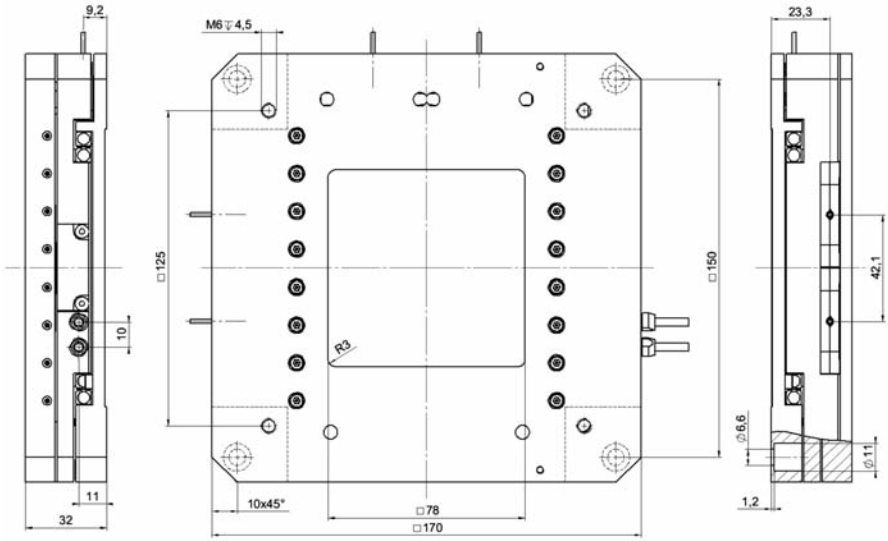

M-686.D64, dimensions in mm. The minimum aperture is 66 x 66 mm with both axes at the maximum position

Technical Data

Model	M-686.D64
Active axes	XY
Motion and positioning	
Travel range	25 x 25 mm
Integrated sensor	Linear encoder
Sensor resolution	0.1 µm
Design resolution	0.1 µm
Min. incremental motion	0.3 µm
Bidirectional repeatability	0.3 µm
Pitch / yaw	±50 µrad
Max. velocity	100 mm/s
Mechanical properties	
Load Capacity*	50 N
Max. push/pull force	7 N
Max. lateral force	4 N
Drive properties	
Motor type	2 x PILine® P-664 per axis
Operating voltage	190 V (Peak-Peak)** 67 V (RMS)**
Electrical power	10 W / axis***
Miscellaneous	
Operating temperature range	-20 to +50 °C
Material	Aluminium (black anodized)
Mass	1.2 kg
Cable length	1.5 m
Connector	2 x MDR connector, 14-pin
Recommended controller/driver	2 x C-867.D64 single-axis controller / driver 2 x C-185.D64 single-axis drive electronics for external servo-controllers (p. 4-116, p. 1-36)

*10 N for max. velocity
**The operating voltage or the piezomotor is supplied by the drive electronics which requires 12 VDC
***For drive electronics

M-686 open-frame stage with P-541.2DD piezo scanner on top, providing a resolution of 0.1 nm and a scanning range of 30 x 30 µm. The system height of the combination with the P-541 XY (or Z) piezo scanner is only 48 mm

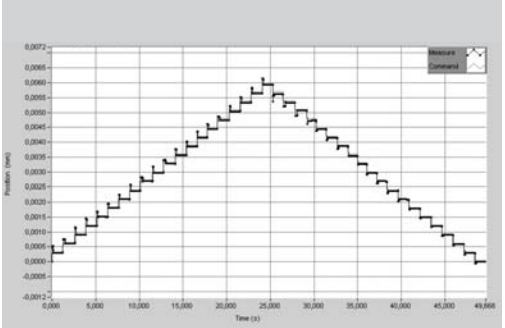

0.3 µm steps performed by M-686

M-833 XZ-Rot Stage: Parallel Kinematic Tripod / Goniometer

Precision Positioning in X, Z, θ_Y

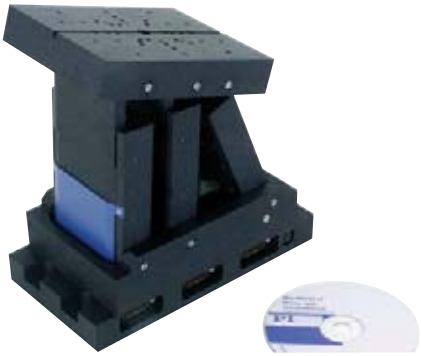

The M-833 parallel-kinematics tripod is designed for precision positioning, offering elevation, translation and tilt motion around the (horizontal) γ-axis, with a user-defined pivot point

- **Goniometer Z Stage with Freely Selectable Pivot Point**
- **Travel Ranges ±25 mm / ±25 mm / ±30°**
- **Load Capacity to 4 kg**
- **Min. Incremental Motion to 0.1 µm**
- **ActiveDrive™ Servo Motors**
- **Compact Design with Parallel Kinematics**

Model	Travel ranges	Max. velocity	Stiffness	Dimensions
M-833.00 Tripod Goniometer-Stage	±25 mm (X, Z), ±30° (θ_Y) (linear)	10 mm/s	50 N/µm	223,2 x 110 x 192 mm

M-880 3-Axis XY-Rot Stage Planar Precision Positioning System

XY-Rot-Z Parallel Kinematics System with Very High Holding Force

M-880.PD for planar load positioning up to 20 kg with sub-micron accuracy

- **Travel Ranges 20 x 20 mm / 8°**
- **Static Load Capacity to 150 kg**
- **ActiveDrive™ Servo Motors**
- **Low Profile through Parallel Kinematics**
- **Min. Incremental Motion to 0.75 µm**
- **Large Clear Aperture**
- **Sophisticated Controller Included**

Model	Active Axes	Travel range	Max. velocity	Stiffness (linear axes)	Dynamic load capacity	Static load capacity
M-880.PD	X, Y, θ_Z	±10 mm, ±4°	20 mm/s	5 N/µm	200 N	1500 N

M-810 Miniature 6-Axis Stage

High Precision in a Small Package

- **Most-Compact Hexapod in the PI Portfolio**
- **Travel Range 40 x 40 x 13 mm**
- **Resolution of a Single Strut <100 nm**
- **Integrated Driver Electronics**

Model	Load capacity	Travel range X / Y / Z	Travel range θ_x / θ_y / θ_z	Max. velocity	Dimensions
M-810.00	5 kg	±20 mm ±20 mm ±6,5 mm	±11° ±11° ±30°	10 mm/s	Outer Ø 100 mm height 118 mm

M-900K OEM XY Stage Planar Scanner

High-Precision XY Positioning System

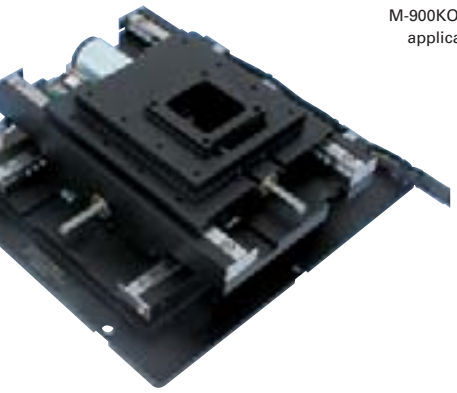

Fast and with high guiding accuracy: the M-900KOPS planar scanner was developed for OEM applications e.g. inside whitelight interferometers

- **Max. Velocity 10 mm/s**
- **Linear encoder with 0.1 µm Resolution**
- **Self-Locking**
- **Load Capacity to 660 N**
- **Low-Backlash, Direct Drive**
- **DC-Servo or Stepper Motor Drives**

Model	Travel range	Min. incremental motion	Bidirectional repeatal
M-900 KOPS planar scanner	50 x 50 mm	0.3 µm	±0.1 µm

M-686K PILine® XY Stage for Microscopy

Low Profile, Large Aperture, High Speed

Closed-loop/open-loop resolution (PZT)	2/1	2/1	–/1	–/1

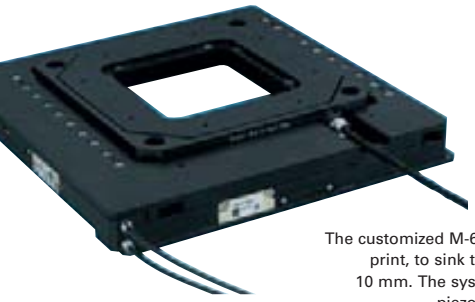

The customized M-686KPMS stage offers a larger footprint, to sink the optional P-541 piezo scanner by 10 mm. The system height together with the P-541 piezo scanner is reduced to only 34 mm

- **Integrated Closed-Loop Piezomotor Drives Provide High Speed to 100 mm/s**
- **Travel Ranges 25 x 25 mm**
- **Integrated Linear Encoders with 0.1 µm Resolution**
- **Low-Profile Combinations with PI Piezo Nanopositioning / Scanning Stages**
- **Clear Aperture 78 x 78 mm, 66 x 66 mm in Extreme Position**
- **Self-Locking at Rest**

Model	Active Axes	Travel	Max. velocity	Load capacity	Dimensions
M-686KPMS PILine® Micro-scopy Stage	X, Y	50 x 50 mm	100 mm/s	50 N (10 N for max. velocity)	210 x 210 x 28 mm

Compact XYZ Stage Fiber Aligner

Nanometer Precision with Motor and Piezo Drive Combination

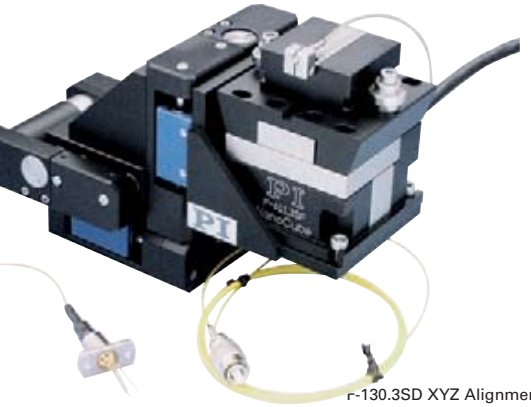

F-130.3SD XYZ Alignment System, 1 nm resolution,

- **Compact, Highly Responsive Coarse / Fine Positioning System, Ideal for Automated Photonics Alignment**
- **5 or 15 mm Motorized Coarse Travel range, 50 nm Min. Incremental Motion**
- **Fast Piezo Drive with Resolution to 1 nm, 100 µm Fine Travel Range, Optional Position Feedback Sensors**
- **Choice of Motors: Stepper or Closed-Loop DC-Motor**
- **Recommended: C-880 Automation Controller**
- **Extensive Accessories, Software Support**

Model	F-130.3SD & F-131.3SD	F-130.3SS & F-131.3SS	F-130.3OD & F-131-3OD	F-130.3OS & F-131.3OS
Drive	Closed-Loop DC motors, closed-loop PZT drives	Stepper motors, closed-loop PZT drives	Closed-Loop DC motors, open-loop PZT drives	Stepper motors, open-loop PZT drives
Motorized travel range (XYZ)	5 & 15 mm	5 & 15 mm	5 & 15 mm	5 & 15 mm

M-500 Micropositioner: XY & XYZ Stage Combinations

High-Precision Linear Guiding, Long Travel, Direct Position Measurement

XYZ combination with two M-511.DD linear stages and an M-501.1PD precision vertical stage

P-562.3CD PIMars™ XYZ piezo-nanopositioning & scanning system (200 µm x 200 µm x 200 µm) mounted on an M-451.1PD elevation stage

- **Travel Ranges 102, 204 and 306 mm (4", 8", 12")**
- **Max. Velocity 125 mm/s with ActiveDrive™ Motors**
- **Optional 0.1 µm Linear Encoder for Highest Accuracy**
- **Load Capacity of 100 kg**
- **Stress-Relieved Aluminum Base for Highest Stability**
- **Zero-Backlash Recirculating Ballscrews**
- **Non-contact Limit and Reference Switches**
- **XY & XYZ Combinations (Special Z-Stages Available)**
- **MTBF >20,000 h**

M-5x1-series translation stages are designed to meet the most demanding positioning requirements and are available in a number of different models. They boast an extremely low profile design to allow multiaxis combinations (see also page 4-58 and page 4-60) and feature a precision-machined base of high-density, stress-relieved aluminum for exceptional stability and minimum weight.

Application Examples

- R&D
- Semiconductor testing
- Mass storage device testing
- Metrology
- Photonics packaging
- Quality assurance testing
- Precision Linear Motion Control

Heavy Duty and Maintenance Free

The stages are equipped with high-precision linear guiding rails with recirculating ball bearings to guarantee 1 µm/100 mm straightness and flatness. Precision-ground recirculating ball screws with preloaded nuts provide low-friction, maintenance-free and backlash-free positioning. This equipment provides high load capacity and guiding accuracy with long lifetime.

Four Drive Options

Maximum dynamic performance is possible with versions featuring the highly efficient ActiveDrive™ direct-drive system, which can achieve speeds of up to 125 mm/s.

The ActiveDrive™ design, developed by PI, features a high-efficiency PWM (pulse width modulation) servo-amplifier mounted side-by-side with the DC motor and offers several advantages:

- Increased efficiency, by eliminating power losses between the amplifier and motor
- Reduced cost of ownership and improved reliability, because no external driver is required
- Elimination of PWM amplifier noise radiation, by mounting the amplifier and motor together in a single, electrically shielded case

The M-5x1.PD version provides velocities up to 125 mm/sec. It is equipped with an ActiveDrive™ DC motor and rotary encoder.

The M-5x1.DD models provide superior repeatability of only 0.2 µm by means of integrated optical linear encoders. A motor brake which assures maintenance of the stage position after power-down is also available. The M-5x1.DG versions feature closed-loop DC motors with shaft-mounted position encoders and precision gearheads providing minimum incremental motion to 0.1 µm with velocities up to 6 mm/s.

The M-5x1.2S versions models feature a cost-effective direct-drive, 2-phase stepper motor, providing very smooth operation and a resolution of 0.1 µm.

Precision Assembly

The stages are individually tested and optimized using a laser interferometer.

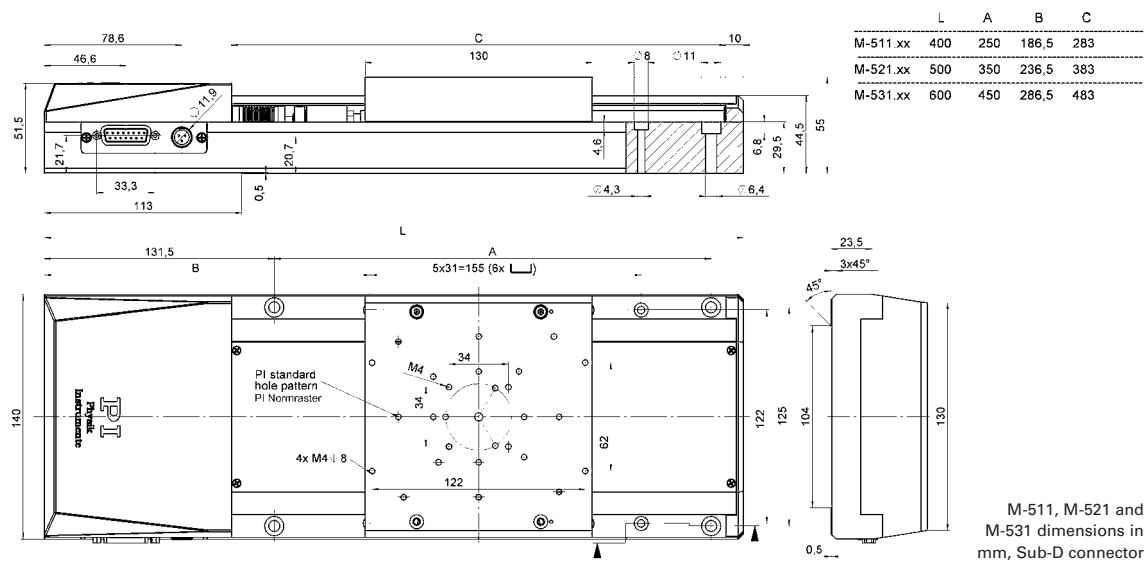

	L	A	B	C
M-511.xx	400	250	186,5	283
M-521.xx	500	350	236,5	383
M-531.xx	600	450	286,5	483

M-511, M-521 and M-531 dimensions in mm, Sub-D connector 15-pin, 3 m cable included

Technical Data

Model	M-511.DD / M-521.DD / M-531.DD	M-511.PD / M-521.PD / M-531.PD	M-511.DG / M-521.DG / M-531.DG	M-511.2S / M-521.2S / M-531.2S	Unit
Motion and positioning					
Travel range	102 / 204 / 306	102 / 204 / 306	102 / 204 / 306	102 / 204 / 306	mm
Integrated sensor	Linear encoder	Rotary encoder	Rotary encoder	–	
Sensor resolution	0.1 µm	4000	2048	–	cts./rev.
Design resolution	0.1	0.5	0.033	0.31	µm
Min. incremental motion	0.1	0.5	0.1	0.1	µm
Unidirectional repeatability	±0.1	±0.5	±0.2	±0.2	µm
Bidirectional repeatability	±0.2	–	–	–	µm
Backlash	–	1	1	1	µm
Accuracy per 50 mm	0.2	2	2	2	µm
Pitch/Yaw	±25 / ±35 / ±50	±25 / ±35 / ±50	±25 / ±35 / ±50	±25 / ±35 / ±50	µrad
Straightness/Flatness per 100 mm	1	1	1	1	µm
Max. velocity	50	125	6	20	mm/s
Mechanical properties					
Thread pitch	2	2	2	2	mm
Gear ratio	–	–	$(28/12)^4$:1 ≈ 29.6:1	–	
Motor resolution*	–	–	–	6400*	steps/rev.
Max. load	1000	1000	1000	1000	N
Max. push/pull force	80 / 80	80 / 80	80 / 80	80 / 80	N
Max. lateral force	200	200	200	200	N
Drive properties					
Motor type	ActiveDrive™ DC Motor	ActiveDrive™ DC Motor	DC-motor, gearhead	2-phase stepper motor*	
Operating voltage	24 (PWM)	24 (PWM)	0 to ±12	24	V
Electrical power	30	30	3		W
Limit and reference switches	Hall-effect	Hall-effect	Hall-effect	Hall-effect	
Miscellaneous					
Operating temperature range	-20 to +65	-20 to +65	-20 to +65	-20 to +65	°C
Material	Al (black anodized)	Al (black anodized)	Al (black anodized)	Al (black anodized)	
Mass	5 / 6.1 / 7.2	5 / 6.1 / 7.2	4.9 / 6 / 7.1	4.9 / 6 / 7.1	kg
Recommended controller/driver	C-863 (single-axis) C-843 PCI board (up to 4 axes)	C-863 (single-axis) C-843 PCI board (up to 4 axes)	C-863 (single-axis, p. 4-1149) C-843 PCI board (p. 4-120) (up to 4 axes)	C-663 (single-axis) (p. 4-112)	

* 2-phase stepper motor, 24 V chopper voltage, max. 0.8 A/phase, 400 full steps/rev., motor resolution with C-663 stepper motor controller

F-206 Six Axis-Stage

Parallel-Kinematics Precision Alignment System / Manipulator, with Controller

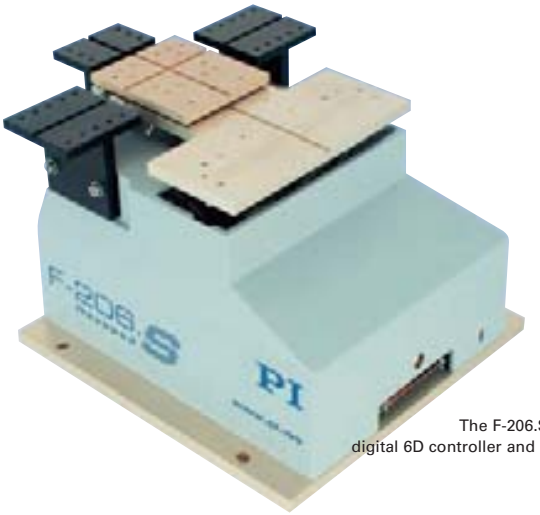

The F-206.S Hexapod comes with a digital 6D controller and comprehensive software

- **Parallel Kinematics with 6 Degrees of Freedom**
- **0.033 µm Actuator Resolution**
- **Repeatability 0.3 µm in Space**
- **No Moving Cables for Improved Reliability, Reduced Friction**
- **Better Dynamics, More Compact than Serial Kinematics Systems**
- **For Scanning and Alignment**
- **Cartesian Coordinate Control with Virtualized Pivot Point**
- **Powerful Digital Controller with Open Source LabView™ Drivers, DLL Libraries...**
- **Integrated Fiber Alignment Routines**

The F-206.S HexAlign™ Hexapod is a highly accurate micropositioning system for complex multi-axis alignment tasks. It is based on PI's long experience with ultra-high-resolution, parallel kinematics stages. Unlike hexapods with variable-length struts ("legs") the F-206 features constant-length struts and friction-free flexure guides. This gives the F-206 even higher precision than other hexapod designs.

Application Examples

- Micromachining
- Photonics packaging
- Fiber alignment
- Semiconductor handling / test systems
- Micromanipulation (life science)
- Optical device testing
- Collimator and fiber bundle alignment
- MEMS positioning/alignment

Compact, Plug & Play

The F-206.S Hexapod is considerably smaller and more accurate than comparable serial kinematics six-axis systems (stacks of single-axis units).

The parallel kinematics of the F-206 is immune to the cumulative bending and guiding errors of the various axes which, together with the inertia and friction of the moving cables, can limit accuracy in stacked systems. In addition, rotations are not set in hardware, but about a pivot point freely definable in software. A high-performance controller does all necessary coordinate transformation for coordinating the six drives. Because all the actuators are attached directly to the same moving platform, there are none of the servo-tuning problems associated with the loading and inertia differences of the different axes, as are inherent in stacked systems.

Virtualized Pivot Point

It is important to have a fixed pivot point for alignment tasks, especially in photonics packaging. Because the parallel kinematics motion of the F-206 is calculated with complex algorithms in the digital controller, it was easy to allow programming any point in space as center of rotation. Furthermore, the cartesian coordinates of any position and any orientation can be entered directly and the specified target will be reached after travel along a smooth path.

Six Degrees of Freedom, No Moving Cables

In the F-206 parallel kinematics design, all cable terminations are on the stationary base, eliminating unpredictable friction and inertia, improving resolution and repeatability. Further advantages of the system are:

- No cable guides required
- Reduced Size and Inertia
- Improved Dynamic and Settling Behavior
- Identical Modular Actuators for Simplified Servicing

Open Command Set, Simplified Programming

Integration of the F-206 in complex applications is facilitated by the system's open command set and comprehensive tool libraries. The controller can be operated either through a host PC, or directly through a keyboard and monitor. It can also run programs stored in a user-friendly, fully documented macro language.

Automatic Optical Alignment

Optional internal and external photometers are available.

Both types are fully integrated with the controller hardware and with routines designed for automatic alignment of collimators, optical fibers and arrays. For more information on the photometers see www.pi.ws.

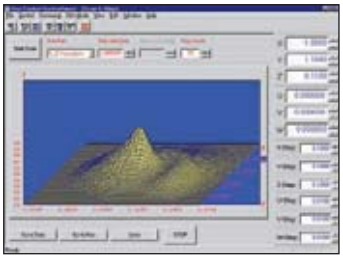

HexControl™ Software displaying scan of photonics component

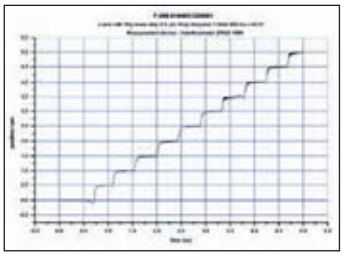

Interferometer test of an F-206.S system shows the excellent repeatability of small steps, here 0.5 µm spaced at 100 ms

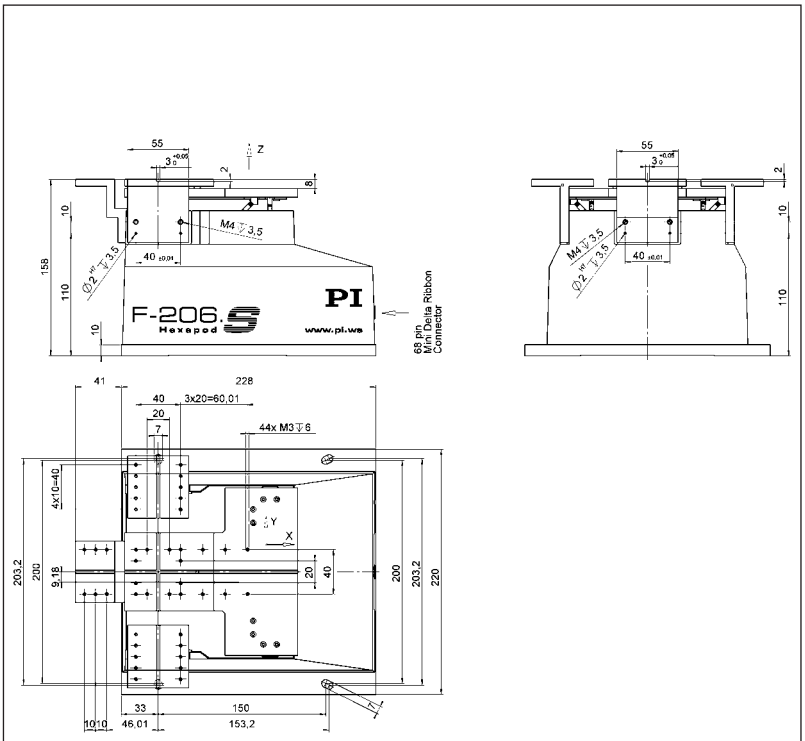

F-206.S. Dimensions in mm

Technical Data

Model	F-206.S0 / F-206.SD
Travel range X*	-8 to +5.7 mm
Travel range Y*	±5.7 mm
Travel range Z*	±6.7 mm
Travel range θ_X *	±5.7°
Travel range θ_Y *	±6.6°
Travel range θ_Z *	±5.5°
Actuator resolution	33 nm
Minimum incremental motion X, Y, Z**	0.1 µm (6-axis move!)
Minimum incremental motion θ_X, θ_Y, θ_Z**	2 µrad (0.400115°) (6-axis move!)
Bidirectional repeatability X, Y, Z	0.3 µm
Bidirectional repeatability θ_X, θ_Y, θ_Z	3.6 µrad
Speed X, Y, Z	0.01 to 10 mm/s
Maximum load in Z	2 kg (centered on platform)
Mass	5.8 kg
Controller	Digital Hexapod controller with optional photometer card and integrated scan and align routines
Operating voltage	100–240 VAC, 50/60 Hz
Software	LabView™ drivers, software for alignment of arrays, DLL libraries, HexControl™, scan and align software, terminal software

*Travel ranges in the coordinate directions (X, Y, Z θ_X, θ_Y, θ_Z) are interdependent. The data given shows maximum travel range of the axis in question (i.e. its travel when all other axes are at their zero positions). If this is not the case, the available travel may be less.

**Six-axis move. No moving cables (unlike serial-kinematic stacked systems) to introduce bending forces, torque and friction which degrade positioning accuracy.

M-110 Miniature Series: XY and XYZ Stage Combinations

Choice of Drives & Travel Ranges, XYZ Combinations Possible

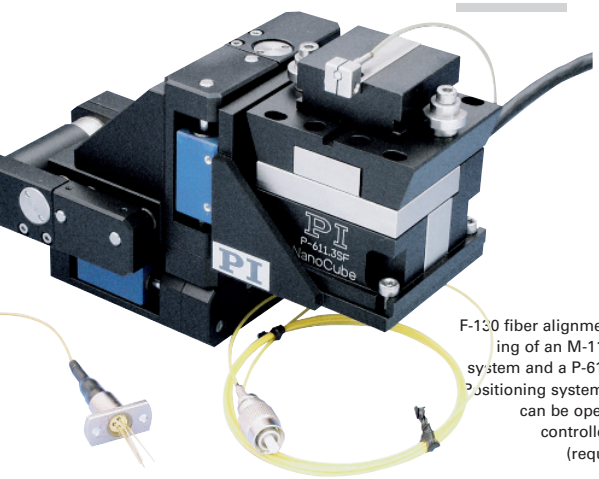

F-130 fiber alignment system consisting of an M-110 XYZ positioning system and a P-611 XYZ Piezo-Nano Positioning system.This combination can be operated by the C-880 controller or NI controllers (request our technote!)

- **Travel Ranges 5, 15 and 25 mm**
- **Very Cost Effective**
- **Min. Incremental Motion to 50 nm**
- **Max. Velocity 2 mm/s**
- **Closed-Loop DC Motors and Stepper Motors**
- **Non-Contact Limit and Reference Switches**
- **Optional Recirculating Ball Screw Drives Provide High Speeds & Long Lifetimes**
- **Vacuum-Compatible Versions Available to 10^{-6} hPa**

M-110, M-111 and M-112 are ultra-high resolution motorized translation stages providing linear motion of 5 to 25 mm in an extremely compact package. They feature a precision lead-screw with sub-micron resolution and precision linear ball bearings guaranteeing <0.5 µm straightness of travel.

Application Examples

- Fiber optics testing
- Fiber positioning
- Metrology
- Micromachining
- Photonics packaging
- Quality assurance testing
- Testing equipment

Compact Dimensions, High Performance

To meet industrial demands, the M-11x.2 linear translation stages are equipped with a recirculating ball screw for precise motion with reduced friction. This allows 24/7 duty cycles. M-110, M-111 and M-112 can be combined to XY and XYZ systems for multiaxis alignment applications.

Stepper and Servo Motors

A miniature DC or stepper motor actuates motion via a backlash-compensated screw / nut system and gearhead. Both drive options provide a cost-effective solution for industrial and OEM environments. To meet the most critical positioning demands, the DC motor is equipped with a high resolution encoder featuring resolution down to 0.007 µm per count.

Limit and Reference Switches

For the protection of your equipment, non-contact Hall-effect limit and reference switches are installed. The direction-sensing reference switch supports advanced automation applications with high precision.

All stages include an integral 0.5 m cable with 15-pin sub-D connector and come with a 3 m extension cable. On the DC servo versions, the connector features integrated line drivers for cable lengths up to 10 meters between stage and controller (DC-motors only).

Low Cost of Ownership

The combination of these positioners with the networkable, single-channel C-863 Mercury™ (DC-Motor, see p. 4-114) or C-663 Mercury™ Step (see p. 4-112) controller offers high performance for a very competitive price in both single- and multiaxis configurations. For 3 or 4 axes, the C-843 PC plug-in board for DC motors (see p. 4-120) can also be recommended.

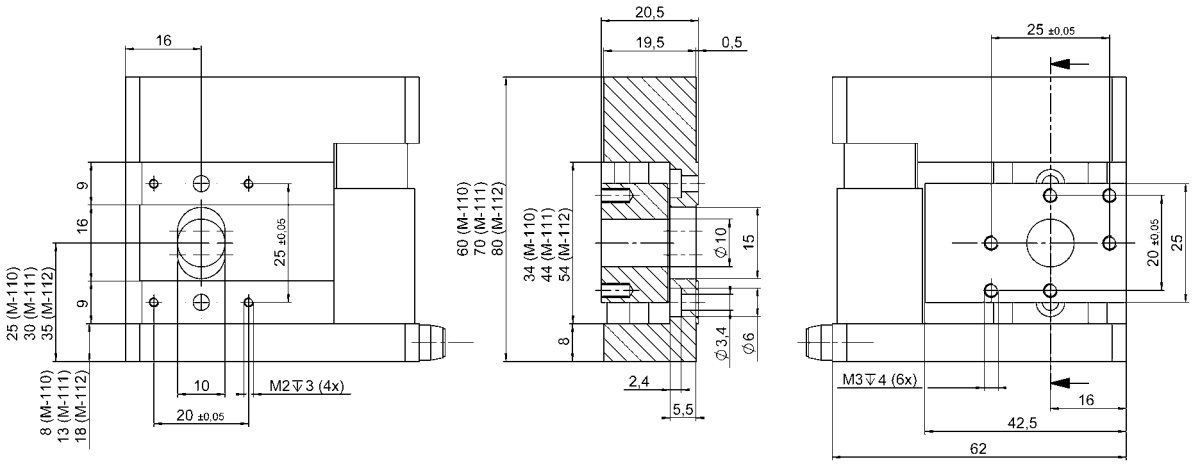

M-110, M-111 and M-112. Cable length: 500 mm, 15-pin sub-D connector with integrated encoder line drivers. C-815.38 motor cable included: 3 m, sub-D, 15/15 pin (m/f)

Technical Data

Model	M-110.1DG / M-111.1DG / M-112.1DG	M-110.12S / M-111.12S / M-112.12S	M-110.2DG / M-111.2DG / M-112.2DG	M-110.22S / M-111.22S / M-112.22S	Units
Motion and positioning					
Travel range	5 / 15 / 25	5 / 15 / 25	5 / 15 / 25	5 / 15 / 25	mm
Integrated sensor	Rotary encoder	–	Rotary encoder	–	
Sensor resolution	2048		2048		Cts./rev.
Design resolution	0.0069	0.038*	0.0086	0.046*	µm
Min. incremental motion	0.05	0.05	0.2	0.2	µm
Backlash	2	2	4	4	µm
Unidirectional repeatability	0.1	0.1	0.5	0.5	µm
Pitch / Yaw	±50 / ±150 / ±150	±50 / ±150 / ±150	±50 / ±150 / ±150	±50 / ±150 / ±150	µrad
Max. velocity	1 / 1.5 / 1.5	1 / 1 / 1	1.5 / 2 / 2	1 / 1 / 1	mm/s
Mechanical properties					
Drive screw	Leadscrew	Leadscrew	Recirculating ballscrew	Recirculating ballscrew	
Thread pitch	0.4	0.4	0.5	0.5	mm
Gear ratio	28.44444:1	28.44444:1	28.44444:1	28.44444:1	
Motor resolution*	–	384*	–	384*	
Max. load	30 / 30 / 20	30 / 30 / 20	30 / 30 / 20	30 / 30 / 20	N
Max. push / pull force	10	10	10	10	N
Max. holding force	10	10	10	10	N
Max. lateral force	15 / 10 / 10	15 / 10 / 10	15 / 10 / 10	15 / 10 / 10	N
Drive properties					
Motor type	DC-motor, gearhead	2-phase stepper motor	DC-motor, gearhead	2-phase stepper motor	
Operating voltage	0 to ±12	24	0 to ±12	24	V
Electrical power	0.52 / 1.75 / 1.75	1.5	0.52 / 1.75 / 1.75 1.5		W
Current consumption	160 / 320 / 320**		160 / 320 / 320**		mA
Limit and reference switches	Hall-effect	Hall-effect	Hall-effect	Hall-effect	
Miscellaneous					
Operating temperature range	-20 to +65	-20 to +65	-20 to +65	-20 to +65	°C
Material	Al (black anodized)	Al (black anodized)	Al (black anodized)	Al (black anodized)	
Mass	0.3 / 0.4 / 0.5	0.3 / 0.4 / 0.5	0.3 / 0.4 / 0.5	0.3 / 0.4 / 0.5	kg
Recommended controller/driver	C-863 single-axis C-843 PCI board, for up to 4 axes	C-863 single-axis	C-863 single-axis C-843 PCI board, for up to 4 axes	C-863 single-axis	

*2-phase stepper motor, 24 V chopper voltage, max. 0.25 A/phase, 24 full steps/rev., motor resolution with C-663 stepper motor controller
**thermally limited

M-605 High-Accuracy Positioner: XY & XYZ Stage Combinations

Ultra-Compact, with Direct Position Measurement

M-605.2DD XYZ-combination

- **Integrated 0.1 µm Linear Encoder for Highest Accuracy**
- **Travel Ranges 25 mm (1") and 50 mm (2")**
- **Max. Velocity 50 mm/s with ActiveDrive™ Motor**
- **High Load Capacity up to 30 kg**
- **Zero-Backlash Recirculating Ballscrews**
- **Non-contact Limit and Reference Switches**
- **Stress-Relieved Aluminum Base for Highest Stability**
- **Flexible Bellows Protects the Mechanics from Dust and Spray**
- **XY & XYZ Combinations Possible**
- **MTBF >20,000 h**

M-605 series translation stages are designed to meet the most demanding positioning requirements in applications where space is limited.
They feature a space-saving design with the ballscrew side-by-side to the motor and an extremely flat, precision-machined base of high-density, stress-relieved aluminum providing exceptional stability and minimum weight.

Application Examples

- R&D
- Semiconductor testing
- Mass storage device testing
- Metrology
- Photonics packaging
- Quality assurance testing
- Precision Linear Motion Control

Integrated Linear Scale Encoder

For highest accuracy and repeatability, M-605 stages are equipped with integrated linear-scale encoders (direct metrology) providing 0.1 µm minimum incremental motion and 1 µm full-travel accuracy.

Heavy Duty and Maintenance Free

All models are equipped with high-precision linear guiding rails and recirculating ball bearings. The choice of components and careful mounting guarantees high load capacity, longer lifetime and high guiding accuracy.

Ballscrews for High Speed, Precision and Lifetime

The precision-ground ballscrew is maintenance-free and preloaded to eliminate mechanical play. Its significantly reduced friction, compared to conventional leadscrews, allows for higher velocity, lower power consumption and longer lifetime.
A flexible bellows protects the mechanics from dust and spray.

ActiveDrive™

For maximum dynamic performance, the M-605 series stages are equipped with the highly efficient ActiveDrive™ direct-drive system, which can achieve speeds of up to 50 mm/s. The ActiveDrive™ design, developed by PI, features a high-efficiency PWM (pulse width modulation) servo-amplifier mounted side-by-side with the DC motor and offers several advantages:

- Increased efficiency, by eliminating power losses between the amplifier and motor
- Reduced cost of ownership and improved reliability, because no external driver is required
- Elimination of PWM amplifier noise radiation, by mounting the amplifier and motor together in a single, electrically shielded case

Limit and Reference Switches

For the protection of your equipment, non-contact Hall-effect limit and reference switches are installed. The direction-sensing reference switch supports advanced automation applications with high precision.

Precision Assembly

Each M-605 stage is precision assembled and optimized using laser interferometers for performance testing.

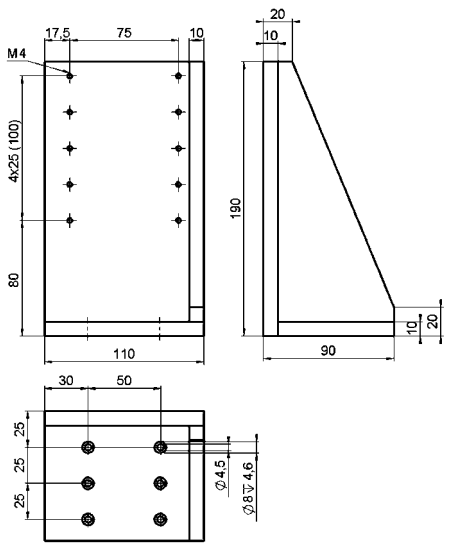

M-605.AV0 angle bracket for vertical mount of M-605 on M-605

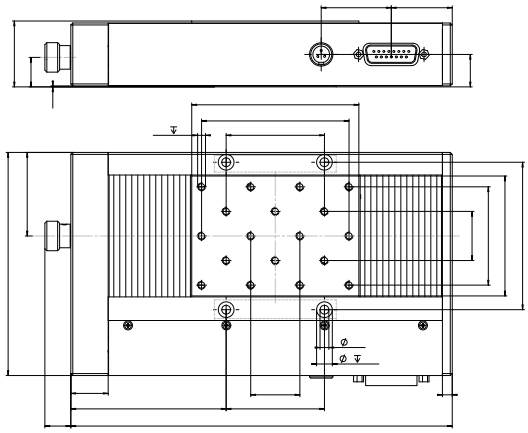

M-605.2DD dimensions (in mm). C-815.38 motor cable included: 3 m, sub-D, 15/15 pin (m/f)

Technical Data

Model	M-605.1DD	M-605.2DD	Units
Active Axes	X	X	
Motion and positioning			
Travel range	25	50	mm
Integrated sensor	Linear encoder	Linear encoder	
Sensor resolution	0.1	0.1	µm
Design resolution	0.1	0.1	µm
Min. incremental motion	0.3	0.3	µm
Unidirectional repeatability	0.1	0.1	µm
Bidirectional repeatability	0.2	0.2	µm
Accuracy	1	1	µm
Pitch	50	50	µrad
Yaw	50	50	µrad
Max. velocity	50	50	mm/s
Origin repeatability	1	1	µm
Mechanical properties			
Thread pitch	1	1	mm
Max. load	300	300	N
Max. push / pull force	20 / 20	20 / 20	N
Max. lateral force	100	100	N
Drive properties			
Motor type	ActiveDrive™ DC Motor	ActiveDrive™ DC Motor	
Operating voltage	24 (PWM)	24 (PWM)	V
Electrical power	6	6	W
Limit and reference switches	Hall-effect	Hall-effect	
Miscellaneous			
Operating temperature range	-20 to +65	-20 to +65	°C
Material	Al (black anodized)	Al (black anodized)	
Mass	1.5	1.8	kg
Recommended controller/driver	C-863 single-axis C-843 PCI board (up to 4 axes)	C-863 single-axis (p. 4-114) C-843 PCI board (p. 4-120) (up to 4 axes)	

M-105 · M-106 Linear Slide: XY & XYZ Stage Combinations

Precision Crossed Roller Guides, PiezoMike Option, XYZ Stage Combinations

M-105.3P XYZ translation stage (includes PiezoMikes and M-009.10, side mount Z-bracket) and optional M-009.20 bracket with F-010.00 V-groove fiber holder

- **Travel Range to 18 mm**
- **All-Stainless-Steel Construction**
- **XY and XYZ Combinations**
- **Resolution up to 0.1 µm**
- **Optional PiezoMike with 10 nm Resolution**
- **Optional Motor Drives**

M-105 and M-106 are micrometer-driven translation stages with travel ranges of 18 mm and 5 mm, respectively. The carriage is spring preloaded against the micrometer tip for excellent repeatability and elimination of backlash. M-105 and M-106 stages are available in one-, two- or three-axis configurations. Precision crossed roller bearings guarantee straightness of travel of better than 2 µm. The M-106 is equipped with a differential micrometer drive providing resolution of 0.1 µm.

PiezoMike Option

Versions with PiezoMike drive provide additional 30 µm fine range for remotely controlled ultra-high-resolution (e.g. scanning or tracking, (see p. 1-54) for further details and recommended controllers).

The vertical stage in the XYZ assembly supports the load through the micrometer spindle (not the preload springs) providing excellent stability.

Motor Drive Upgrades

Two motor drives are available, the M-231.17 and the M 232.17 actuators (see p. 1-48 and p. 1-49). Both provide resolution a resolution of 0.1 µm.

Technical Data

Model	M-105.10*	M-105.1P*	M-106.10*	Unit
Travel range	18	18	5	mm
Piezo fine travel range	–	30	–	µm
Min. incremental motion (piezo drive)	–	0.01	–	µm
Min. incremental motion (micrometer drive)**	1	1	0.1	µm
Backlash	2	2	2	µm
Straightness	2	2	2	µm
Flatness	2	2	2	µm
Max. normal load capacity	100	100	100	kg
Max. push/pull force	20 / 4	20 / 4	20 / 4	N
Max. lateral force	4	4	4	N
Drive	M-626.00	P-854.00	M-653.00	
Micrometer pitch	0.5 / –	0.5 / –	0.4 / 0.02	mm/rev.
Mass	0.32	0.38	0.33	kg
Body material	St	St	St	
Recommended piezo driver	–	E-660 (p. 2-119), E-610 (p. 2-110) E-500 System (p. 2-142)	–	

*Versions M-105.2x, M-106.2x and M-105.3x M-106.x0 are combinations of basic .1x. versions
**Motorized versions achieve up to 100 nm.

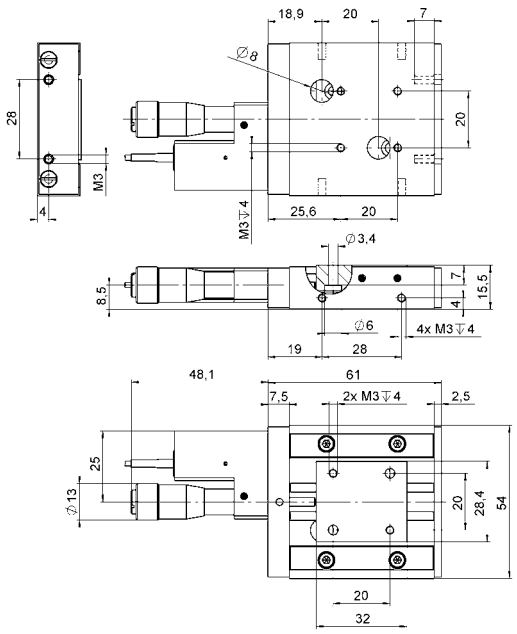

M-105.1P. dimensions in mm

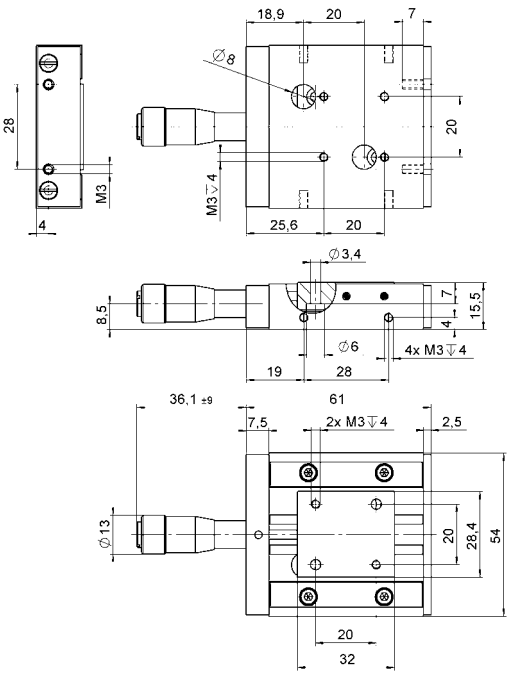

M-105.10. dimensions in mm

NanoCube® XYZ Stage with Piezo Flexure Drive

Long-Travel Multi-Axis Piezo Stage for Precision Alignment Applications

P-615NanoCube® XYZ Nanopositioning System provides up to 420 x 420 x 300 µm travel range

- **Up to 420 x 420 x 300 µm Travel Range**
- **Resolution 1 nm**
- **Parallel-Kinematics / Metrology for Enhanced Responsiveness / Multi-Axis Precision**
- **Clear Aperture of 10 mm Ø, Ideal for Alignment and Photonics Packaging Applications**
- **Outstanding Lifetime Due to PICMA® Piezo Actuators**
- **Open- & Closed-Loop Versions**
- **Vacuum-Compatible Versions to 10^{-9} hPa**
- **Frictionless, High-Precision Flexure Guiding System**

The P-615 NanoCube® is a multi-axis piezo nanopositioning and alignment system. Its 420 x 420 x 300 µm, XYZ positioning and scanning range comes in a compact package. Equipped with a zero-stiction, zero-friction guidance system, this NanoCube® provides motion with ultra-high resolution and settling times of only a few milliseconds.

Fiber Positioning

The P-615 NanoCube® is equipped with a fiber adapter interface similar to the P-611.3SF and accommodates all F-603-series fiber holders and accessories. Fiber optics handling is facilitated by the clear aperture.

Double Stiffness for Fast Response

The P-615's unique flexure design has double the stiffness in the vertical axis than in X and Y, providing faster response and higher operating frequencies under load. For example, the settling time to reach a commanded position with 1% accuracy is only 15 ms in the Z-axis with 100 g load (as opposed to 10 ms without load).

Open-Loop and Closed-Loop Operation

The open-loop basic model P-615.30L is ideal for applications where fast response and very high resolution are essential but specifying or reporting absolute position values is either not required or is handled by external sensors, e. g. in tracking or fiber positioning tasks. In open-loop mode, the piezo displacement is roughly proportional to the applied voltage (see p. 2-184).

Capacitive Sensors for Highest Accuracy

The P-615.3C models are equipped with high-accuracy, capacitive position sensors. PI's proprietary capacitive sensors measure position directly and without physical contact. They are free of friction and hysteresis, a fact which, in combination with the positioning resolution of well under 1 nm, makes it possible to achieve very high levels of linearity. A further advantage of direct metrology with capacitive sensors is the high phase fidelity and the high bandwidth of up to 10 kHz.

Active and Passive Guidance for Nanometer Flatness and Straightness

Wire-cut flexures optimized with Finite Element Analysis (FEA) are used to guide the stage. The FEA techniques give the design the highest possible stiffness and minimize linear and angular runout. Further enhancement is achieved by active trajectory control: multi-axis nanopositioning systems equipped with parallel metrology are able to measure platform position in all degrees of freedom against a common, fixed reference. In such systems, undesirable motion from one actuator in the direction of another (cross-talk) is detected immediately and actively compensated by the servo-loops. This can keep deviation from a trajectory to under a few nanometers, even in dynamic operation.

Ceramic Insulated Piezo Actuators Provide Long Lifetime

Highest possible reliability is assured by the use of award-winning PICMA® multilayer piezo actuators. PICMA® actuators are the only actuators on the market with ceramic-only insulation, which makes them resistant to ambient humidity and leakage-current failures. They are thus far superior to conventional actuators in reliability and lifetime.

Application Examples

- Micromanipulation
- Biotechnology
- Semiconductor testing
- Photonics / integrated optics

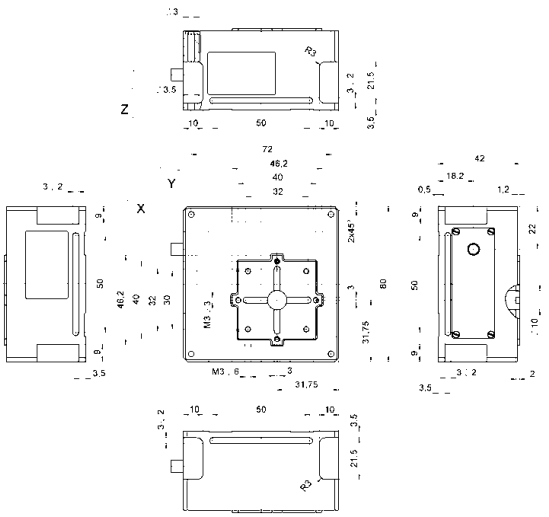

P-615 dimensions in mm.
The clear aperture has a diameter of 10 mm.

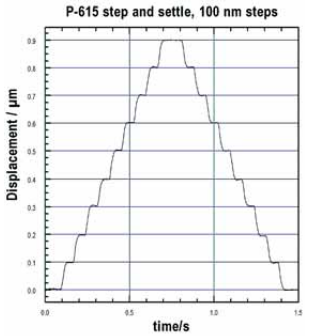

P-615, X-axis with 100 g load performing 100 nm steps in rapid sequence without overshoot. Settling time for the Z-axis to reach a commanded position with 1 % accuracy is only 15 ms.

P-615 with optional fiber holder F-603.22

Technical Data

Model	P-615.3CD / P-615.3CL	P-615.30L	Units	Tolerance
Active axes	X, Y, Z	X, Y, Z		
Motion and positioning				
Integrated sensor	Capacitive	–		
Open-loop travel in X/Y/Z, -20 to +120 V	420 / 420 / 300	420 / 420 / 300	µm	min. (+20 %/-0 %)
Closed-loop travel X/Y/Z	350 / 350 / 250	–	µm	
Open-loop resolution X/Y/Z	0.5	0.5	nm	typ.
Closed-loop resolution X/Y/Z	1	–	nm	typ.
Linearity X/Y/Z	0.02	–	%	typ.
Repeatability in X, Y, Z	±7.5 / ±7.5 / ±5	–	nm	typ.
Pitch in X,Y	100	100	µrad	typ.
Yaw in X, Y	50	50	µrad	typ.
Runout θ_X, θ_Y (Z motion)	10	10	µrad	typ.
Mechanical properties				
Stiffness X / Y / Z	0.13 / 0.13 / 0.35	0.13 / 0.13 / 0.35	N/µm	±20 %
Unloaded resonant frequency in X / Y / Z	210 / 210 / 250	210 / 210 / 250	Hz	±20 %
Resonant frequency @ 100 g in X / Y / Z	125 / 125 / 200	125 / 125 / 200	Hz	±20 %
Push/pull force capacity in motion direction	20 / 10	20 / 10	N	Max.
Load capacity	20	20	N	Max.
Drive properties				
Ceramic type	PICMA® P-885	PICMA® P-885		
Electrical capacitance in X / Y / Z	3.7 / 3.7 / 6.2	3.7 / 3.7 / 6.2	µF	±20 %
Dynamic operating current coefficient (DOCC) in X / Y / Z	1.3 / 1.3 / 3.1	1.3 / 1.3 / 3.1	µA/(Hz·µm)	±20 %
Miscellaneous				
Operating temperature range	-20 to 80	-20 to 80	°C	
Material	Aluminum	Aluminum		
Mass	0.58	0.57	kg	±5 %
Cable length	1.5	1.5	m	±10 mm
Sensor / voltage connection	Sub-D special (CD-version); (no LEMO (CL-version)	LEMO sensor)		

Resolution of PI Piezo Nanopositioners is not limited by friction or stiction. Value given is noise equivalent motion with E-503 amplifier (p. 2-146).

Recommended controller
Multi-channel digital controllers: E-710 bench-top (p. 2-128), E-712 modular (p. 2-140), E-725 high-power (p. 2-126), E-761 PCI board (p. 2-130)
Multi-channel:
E-500 modular piezo controller system (p. 2-142) with E-509 servo-controller (p. 2-152) (optional) and as amplifier either E-503 (three channels) (p. 2-146) or E-505 (1 per axis, high-power, p. 2-147) modules P-615.30L (p. 2-68): E-610 controller / amplifier (p. 2-110) (1 per axis)

PIMars™ XYZ Stage with Piezo Flexure Drive

High-Precision Nanopositioning Stage, 3 to 6 Axes

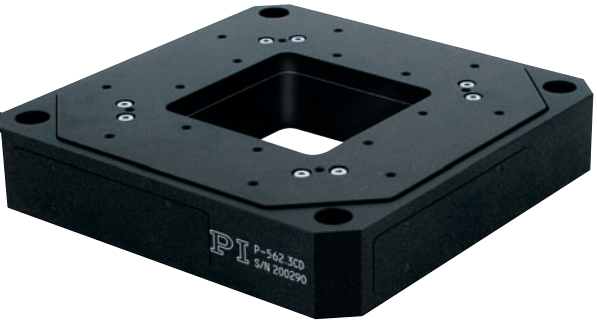

P-562 PIMars™ multi-axis, parallel-kinematics nanopositioning stages are available with up to 340 µm travel per axis. Custom versions to 6 DOF are available

- **Parallel-Kinematics / Metrology for Enhanced Responsiveness / Multi-Axis Precision**
- **Travel Ranges to 340 x 340 x 340 µm**
- **Capacitive Sensors for Highest Linearity**
- **Frictionless, High-Precision Flexure Guiding System**
- **Excellent Scanning Flatness**
- **High-Dynamics XYZ Version Available; Custom Versions to 6-DOF**
- **Clear Aperture 66 x 66 mm**
- **Outstanding Lifetime Due to PICMA® Piezo Actuators**
- **UHV Versions to 10^{-9} hPa**

PIMars™ open-frame piezo stages are fast and highly accurate multi-axis scanning and nanopositioning systems with flatness and straightness in the nanometer range.

The 66 x 66 mm clear aperture is ideal for transmitted-light applications such as near-field scanning or confocal microscopy and mask positioning.

Large Variety of Models

PIMars™ multi-axis nanopositioners are offered in a large variety of configurations. Standard models include long-travel systems (to 300 x 300 x 300 µm), high-speed and vacuum versions. Custom six-axis designs with rotation to 6 mrad are available on request.

PI offers versions specially designed for applications in ultra-high vacuum with vacuum-qualified components only. The integrated ceramic-encapsulated PICMA® actuators allow high bakeout temperatures and assure minimal outgassing rates. A non-magnetizable version is available on request.

Application Examples

- Scanning microscopy
- Mask/wafer positioning
- Interferometry
- Metrology
- Biotechnology
- Micromanipulation

Direct Drive for Ultra-Fast Scanning and Positioning

The P-561.3DD versions have resonant frequencies to 1.0 kHz, enabling millisecond scanning rates with sub-nanometer resolution.

Capacitive Sensors for Highest Accuracy and Position Stability

PI's proprietary capacitive sensors measure position directly and without physical contact. They are free of friction and hysteresis, a fact which, in combination with the positioning resolution of well under 1 nm, makes it possible to achieve very high levels of linearity. A further advantage of direct metrology with capacitive sensors is the high phase fidelity and the high bandwidth of up to 10 kHz.

Active and Passive Guidance for Nanometer Flatness and Straightness

Wire-cut flexures optimized with Finite Element Analysis (FEA) are used to guide the stage. The FEA techniques give the design the highest possible stiffness and minimize linear and angular runout. Further enhancement is achieved by active trajectory control: multi

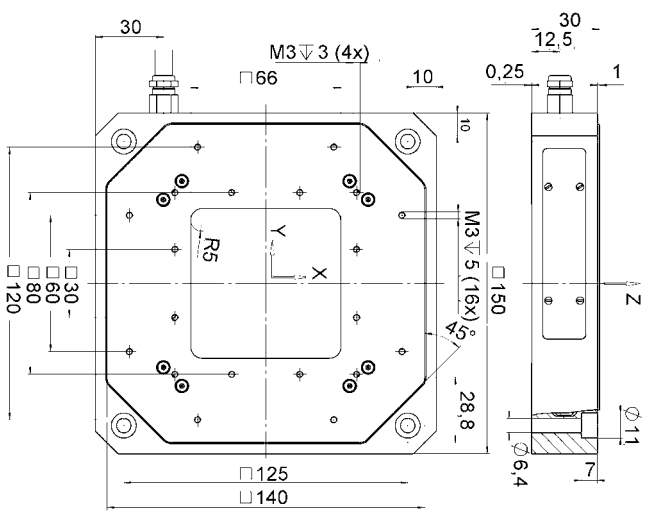

P-561, P-562, P-562 dimensions in mm

System properties

System Configuration	P-561.3CD with E-710 digital controller, 330 g load
Amplifier bandwidth, small signal	25 Hz in X, Y; 35 Hz in Z
Settling time (10 % step)	20 ms

axis nanopositioning systems equipped with parallel metrology are able to measure platform position in all degrees of freedom against a common, fixed reference. In such systems, undesirable motion from one actuator in the direction of another (cross-talk) is detected immediately and actively compensated by the servo-loops. This can keep deviation from a trajectory to under a few nanometers, even in dynamic operation.

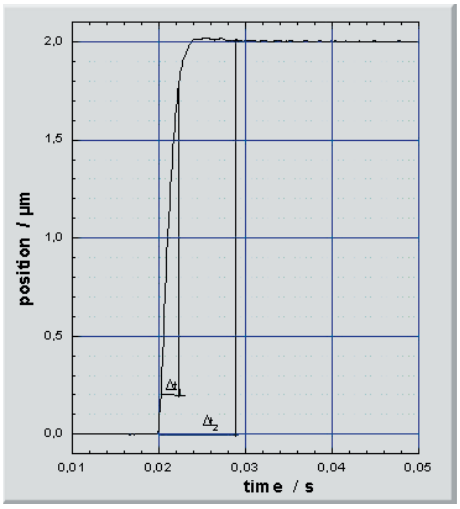

P-562.3CD (unloaded) step and settle is faster than 10 ms in X, Y and Z

Technical Data

Model	P-561.3CD	P-562.3CD	P-563.3CD	P-561.3DD	Units	Tolerance
Active axes	X, Y, Z	X, Y, Z	X, Y, Z	X, Y, Z		
Motion and positioning						
Integrated sensor	Capacitive	Capacitive	Capacitive	Capacitive		
Open-loop travel, -20 to +120 V	150 x 150 x 150	300 x 300 x 300	340 x 340 x 340	58 x 58 x 18	µm	min. (+20 %/0 %)
Closed-loop travel	100 x 100 x 100	200 x 200 x 200	300 x 300 x 300	45 x 45 x 15	µm	
Open-loop resolution	0.2	0.4	0.5	0.1	nm	typ.
Closed-loop resolution	0.8	1	2	0.2	nm	typ.
Linearity	0.03	0.03	0.03	0.01*	%	typ.
Repeatability in X, Y, Z	2 / 2 / 2	2 / 2 / 4	2 / 2 / 4	2 / 2 / 2	nm	typ.
Pitch in X,Y	±1	±2	±2	±3	µrad	typ.
Runout θ_x, θ_y (Z motion)	±15	±20	±25	±3	µrad	typ.
Yaw in X, Y	±6	±10	±10	±3	µrad	typ.
Flatness in X, Y	±15	±20	±25	±10	nm	typ.
Crosstalk X, Y (Z motion)	±30	±50	±50	±20	nm	typ.
Mechanical properties						
Unloaded resonant frequency in X / Y / Z	190 / 190 / 380	160 / 160 / 315	140 / 140 / 250	920 / 920 / 1050**	Hz	±20 %
Resonant frequency @ 100 g in X / Y / Z	–	145 / 145 / 275	120 / 120 / 215	860 / 860 / 950	Hz	±20 %
Resonant frequency @ 330 g in X / Y / Z	140 / 140 / 300	130 / 130 / 195	110 / 110 / 170	500 / 500 / 470	Hz	±20 %
Push force capacity in motion direction in X / Y / Z	200 / 200 / 50	120 / 120 / 50	100 / 100 / 50	200 / 200 / 50	N	Max.
Pull force capacity in motion direction in X / Y / Z	30 / 30 / 30	30 / 30 / 30	30 / 30 / 30	30 / 30 / 30		
Load capacity	50	50	50	50	N	Max.
Drive properties						
Ceramic type	PICMA® P-885	PICMA® P-885	PICMA® P-885	PICMA® P-885 in Z, P-888 in XY		
Electrical capacitance in X / Y / Z	5.2 / 5.2 / 10.4	7.4 / 7.4 / 14.8	7.4 / 7.4 / 14.8	38 / 38 / 6	µF	±20 %
Dynamic operating current coefficient (DOCC) in X / Y / Z	6.5 / 6.5 / 13	4.6 / 4.6 / 9.25	3.1 / 3.1 / 6.1	106 / 106 / 50	µA/ (Hz • µm)	±20 %
Miscellaneous						
Operating temperature range	-20 to 80	-20 to 80	-20 to 80	-20 to 80	°C	
Material	Aluminum	Aluminum	Aluminum	Aluminum		
Mass	1.45	1.45	1.45	1.55	kg	±5 %
Cable length	1.5	1.5	1.5	1.5	m	±10 mm
Sensor / voltage connection	Sub-D Special	Sub-D Special	Sub-D Special	Sub-D Special		

Resolution of PI Piezo Nanopositioners is not limited by friction or stiction. Value given is noise equivalent motion with E-710 (p. 2-128) controller.
*With digital controller. Non-linearity of direct drive stages measured with analog controllers is typically up to 0.1 %.

Recommended controller
Multi-channel digital controllers: E-710 bench-top (p. 2-128), E-712 modular (p. 2-140), E-725 high-power (p. 2-126), E-761 PCI board (p. 2-130)

P-500 Series XYZ Piezo Stage

High-Dynamics Nanoscanner for Scanning Probe Microscopy

P-527.2CL parallel-kinematic nanopositioning system

- **Travel Ranges to 200 µm**
- **Sub-Nanometer Resolution**
- **Frictionless, High-Precision Flexure Guiding System**
- **Capacitive Sensors for Highest Linearity**
- **Parallel-Kinematics / Metrology for Enhanced Responsiveness / Multi-Axis Precision**
- **Clear Aperture 66 x 66 mm**
- **Outstanding Lifetime Due to PICMA® Piezo Actuators**

P-517 and P-527 high-dynamics, multi-axis piezo-nanopositioning stages are available in XY ΘZ, XY and XYZ configurations featuring linear travel ranges to 200 x 200 x 20 µm and rotation ranges to 4 mrad. The 66 x 66 mm clear aperture is ideal for transmitted-light applications.
Z/tip/tilt versions in the same form factor are also offered as models P-518, P-528, P-558 (see p. 2-46) and as custom versions with up to six degrees of freedom.

Capacitive Sensors for Highest Accuracy

PI's proprietary capacitive sensors measure position directly and without physical contact. They are free of friction and hysteresis, a fact which, in combination with the positioning resolution of well under 1 nm, makes it possible to achieve very high levels of linearity. A further advantage of direct metrology with capacitive sensors is the high phase fidelity and the high bandwidth of up to 10 kHz.

Application Examples

- Metrology
- Interferometry
- Optics
- Lithography
- Nanopositioning
- Scanning microscopy
- Mass storage device testing
- Laser technology
- Micromachining

Technical Data

Model	P-517.2CL	P-527.2CL	P-517.3CL/ P-517.3CD	P-527.3CL/ P-527.3CD	P-517.RCD	P-527.RCD
Active axes	X, Y	X, Y	X, Y, Z	X, Y, Z	X, Y, θ_z	X, Y, θ_z
Motion and positioning						
Integrated sensor	Capacitive	Capacitive	Capacitive	Capacitive	Capacitive	Capacitive
Open-loop travel, -20 to +120 V	130	250	130; Z: 25	250; Z: 25	130; θ_z: ±1.3 mrad	250; θ_z: ±2.5 mrad
Closed-loop travel	100	200	100; Z: 20	200; Z: 20	100; θ_z: ± 1 mrad	200; θ_z: ± 2 mrad
Open-loop resolution	0.3	0.5	0.3; Z: 0.1	0.5; Z: 0.1	0.3; θ_z: ±0.1 µrad	0.5; θ_z: ±0.1 µrad
Closed-loop resolution	1	2	1; Z: 0.1	2; Z: 0.1	1; θ_z: ±0.3 µrad	2; θ_z: ±0.3 µrad
Linearity	0.03	0.03	0.03	0.03	0.03	0.03
Repeatability	±5	±10	±5; Z: ±1	±10; Z: ±1	±5; θ_z: ±0.5 µrad	±10; θ_z : ±1 µrad
Mechanical properties						
Stiffness	2	1	2; Z: 15	1; Z: 15	2	1
Unloaded resonant frequency	450	350	450; Z: 1100	350; Z: 1100	450; θ_z: 400	350; θ_z: 300
Resonant frequency @ 500 g X, Y	250	190	250	190	250	190
Resonant frequency @ 2500 g X, Y	140	110	140	110	140	110
Push/pull force capacity in motion direction	50 / 30	50 / 30	50 / 30	50 / 30	50 / 30	50 / 30
Drive properties						
Ceramic type	PICMA® P-885	PICMA® P-885	PICMA® P-885	PICMA® P-885	PICMA® P-885	PICMA® P-885
Electrical capacitance	9.2	9.2	9; Z: 6	9; Z: 6	9	9
Dynamic operating current coefficient (DOCC)	11.5	5.8	11.5; Z: 37	5.5; Z: 37	11.5	5.5
Miscellaneous						
Operating temperature range	-20 to 80	-20 to 80	-20 to 80	-20 to 80	-20 to 80	-20 to 80
Material	Aluminum	Aluminum	Aluminum	Aluminum	Aluminum	Aluminum
Mass	1.4	1.4	1.45	1.45	1.4	1.4
Sensor / voltage connection	LEMO	LEMO	Sub-D special (CD-version) LEMO (CL-version)	Sub-D special (CD-version) LEMO (CL-version)	Sub-D Special	Sub-D Special

Resolution of PI Piezo Nanopositioners is not limited by friction or stiction. Value given is noise equivalent motion with E -503 or E-710 controller (p. 2-146 or p. 2-128)
Linear Dynamic Operating Current Coefficient in µA per Hz and µm. Example for P-527.2xx: Sinusoidal scan of 30 µm at 10 Hz requires approximately 1.8 mA drive current (p. 2-70). Electrical capacitance and DOCC of the rotation axes base upon differential motion in X, Y; therefore not stated.
Recommended controller
Versions with LEMO connectors: Single-channel (1 per axis): E-610 servo-controller / amplifier (p. 2-110), E-625 servo-controller, bench-top (p. 2-114), E-621 controller module (p. 2-160) Multi-channel: modular piezo controller system E-500 (p. 2-142) with amplifier module E-503 (three channels) (p. 2-146) or E-505 (1 per axis, high-power) (p. 2-147) and E-509 controller (p. 2-152)
Versions with Sub-D connectors: Multi-channel digital controllers: E-710 bench-top (p. 2-128), E-712 modular (p. 2-140), E-725 high-power (p. 2-126), E-761 PCI board (p. 2-130)

Active and Passive Guidance for Nanometer Flatness and Straightness

Flexures optimized with Finite Element Analysis (FEA) are used to guide the stage. The FEA techniques provide for the highest possible stiffness in, and perpendicular to, the direction of motion, and minimize linear and angular runout. Flexures allow extremely high-precision motion, no matter how minute, as they are completely free of play and friction. Due to the parallel kinematics design there is only one common moving platform for all axes, minimizing mass, enabling identical dynamic behavior and eliminating cumulative errors. Parallel kinematics also allows for a more compact construction and faster response compared to stacked or nested designs. The high precision due to flexure guidance is further enhanced by Active Trajectory Control: Multi-axis nanopositioning systems equipped with both parallel kinematics and parallel direct metrology are able to measure platform position in all degrees of freedom against one common fixed reference. In such systems, undesirable motion from one actuator in the direction of another (cross-talk) is detected immediately and actively compensated by the servo-loops. This Active Trajectory Control Concept can keep deviation from a trajectory to under a few nanometers, even in dynamic operation.

Ceramic Insulated Piezo Actuators Provide Long Lifetime

Highest possible reliability is assured by the use of award-winning PICMA® multilayer piezo actuators. PICMA® actuators are the only actuators on the market with ceramic-only insulation, which makes them resistant to ambient humidity and leakage-current failures. They are thus far superior to conventional actuators in reliability and lifetime.

Units	Tolerance
µm	min.(+20%/0%)
µm	
nm	typ.
nm	typ.
%	typ.
nm	typ.
N/µm	±20%
Hz	±20%
Hz	±20%
Hz	±20%
N	Max.
µF	±20%
µA/(Hz • µm)	±20%
°C	
kg	±5%

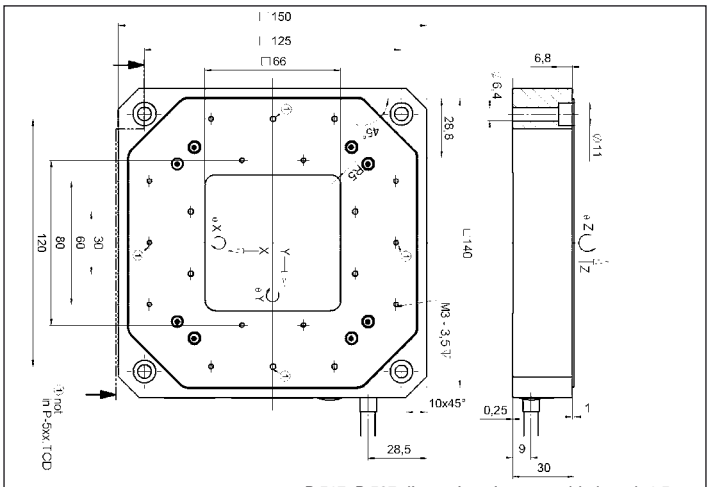

P-517, P-527 dimensions in mm, cable length 1.5 m

NanoCube® XYZ Stage with Piezo Flexure Drive

Compact Multi-Axis Piezo System for Nanopositioning and Fiber Alignment

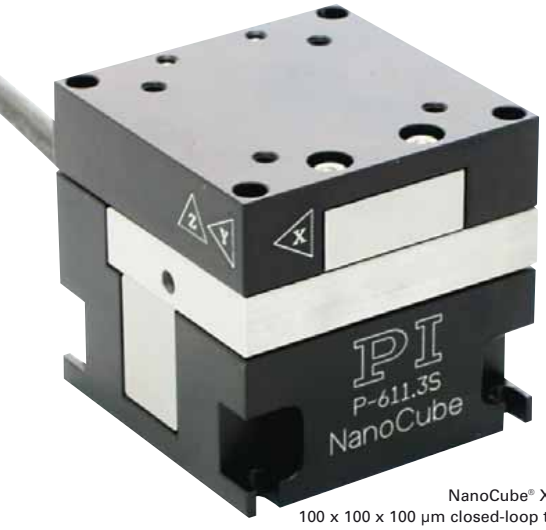

NanoCube® XYZ-nanopositioning system, 100 x 100 x 100 µm closed-loop travel range, resolution 1 nm

- **Up to 120 x 120 x 120 µm Travel Range**
- **Very Compact: 44 x 44 x 44 mm**
- **Resolution to 0.2 nm, Rapid Response**
- **Frictionless, High-Precision Flexure Guiding System**
- **Outstanding Lifetime Due to PICMA® Piezo Actuators**
- **Fast Multi-Axis Scanning**
- **Version with Integrated Fiber Adapter Interface**
- **Cost-Effective Mechanics/Electronics System Configurations**

The P-611 NanoCube® piezo stage is a versatile, multi-axis piezo-nanopositioning system. Its 100 x 100 x 100 µm positioning and scanning range comes in an extremely compact package of only 44 x 44 x 44 mm. Equipped with a stiff, zero-stiction, zero-friction guiding system, this NanoCube® provides motion with ultra-high resolution and settling times of only a few milliseconds. The minimal moved masses and the stiff piezo drive make it ideal for high-throughput applications such as fiber alignment where it enables significantliy faster device characterization than achievable with conventional motorized drives.

Application Examples

- Photonics / integrated optics
- Micromanipulation
- Biotechnology
- Semiconductor testing
- Fiber positioning

Closed-Loop and Open-Loop Versions

High-resolution, fast-responding, strain gauge sensors (SGS) are applied to appropriate locations on the drive train and provide a high-bandwidth, nanometer-precision position feedback signal to the controller. The sensors are connected in a full-bridge configuration to eliminate thermal drift, and assure optimal position stability in the nanometer range.
The open-loop models are ideal for applications where fast response and very high resolution are essential, but absolute positioning is not important, e.g. in tracking or fiber positioning. They can also be used when the position is controlled by an external linear position sensor such as an interferometer, a PSD (position sensitive diode), CCD chip / image processing system, or the eyes and hands of an operator.

Versatility & Combination with Motorized Stages

The P-611 family of piezo stages comprises a variety of single- and multi-axis versions (X, XY, Z, XZ and XYZ) that can be easily combined with a number of very compact manual or motorized micropositioning systems to form coarse/fine positioners with longer travel ranges (see p. 2-20, p. 2-36 and p. 2-50). For fiber positioning tasks, several fiber, waveguide and optics adapters are available for mounting on the NanoCube® P-611.3SF (e.g. for combination with the F-206.S nanoalignment system see p. 4-12).

High Reliability and Long Lifetime

The compact P-611 systems are equipped with preloaded PICMA® high-performance piezo actuators which are integrated into a sophisticated, FEA-modeled, flexure guiding system. The PICMA® actuators feature cofired ceramic encapsulation and thus offer better performance and reliability than conventional piezo actuators. Actuators, guidance and sensors are maintenance-free and not subject to wear, and thus offer an extraordinary reliability.

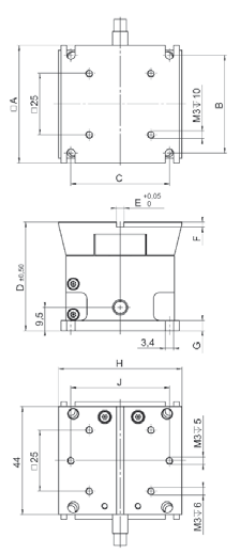

	A	B	C	D	E	F	G	H	J
P-611.3O	44	38,2	37,8	43,2	-	-	3,5	44	-
P-611.3S	44	38,2	37,8	43,2	-	-	3,5	44	-
P-611.3OF	44	38,2	37,8	44,2	3	2	3,5	50	40
P-611.3SF	48	40	40	44,2	3	2	4,1	50	40

P-611.3 dimensions in mm

Combination of P-611.3SF NanoCube® XYZ Nanopositioning System, 100 x 100 x 100 µm and M-111 XYZ MicroPositioner 15 x 15 x 15 mm

Technical Data

Model	P-611.3S P-611.3SF	P-611.3O P-611.3OF	Units	Tolerance
Active axes	X, Y, Z	X, Y, Z		
Motion and positioning				
Integrated sensor	SGS			
Open-loop travel, -20 to +120 V	120 / axis	120 / axis	µm	min. (+20 %/0 %)
Closed-loop travel	100 / axis	–	µm	
Open-loop resolution	0.2	0.2	nm	typ.
Closed-loop resolution	1	–	nm	typ.
Linearity	0.1	–	%	typ.
Repeatability	<10	–	nm	typ.
Pitch in X,Y	±5	±5	µrad	typ.
Runout θ_X (Z motion)	±10	±10	µrad	typ.
Yaw in X	±20	±20	µrad	typ.
Yaw in Y	±10	±10	µrad	typ.
Runout θ_Y (Z motion)	±10	±10	µrad	typ.
Mechanical properties				
Stiffness	0.3	0.3	N/µm	±20 %
Unloaded resonant frequency X / Y / Z	350 / 220 / 250	350 / 220 / 250	Hz	±20 %
Resonant frequency @ 30 g X / Y / Z	270 / 185 / 230	270 / 185 / 230	Hz	±20 %
Resonant frequency @ 100 g X / Y / Z	180 / 135 / 200	180 / 135 / 200	Hz	±20 %
Push/pull force capacity in motion direction	+15 / -10	+15 / -10	N	Max.
Load capacity	15	15	N	Max.
Drive properties				
ceramic type	PICMA® P-885	PICMA® P-885		
Electrical capacitance	1.5	1.5	µF	±20 %
Dynamic operating current coefficient	1.9	1.9	µA/(Hz • µm)	±20 %
Miscellaneous				
Operating temperature range	-20 to 80	-20 to 80	°C	
Material	Aluminum, steel	Aluminum, steel		
Dimensions	44 x 44 x 43.2 SF-version: 44 x 50 x 44.2	44 x 44 x 43.2 OF-version: 44 x 50 x 44.2	mm	
Mass	0.32	0.32	kg	±5 %
Cable length	1.5	1.5	m	±10 mm
Sensor connector	Sub-D	–		
Voltage connection	Sub-D	Sub-D		
Recommended controller / amplifier	E-664 Nanocube® Controller (p. 2-137)	3 x E-610.00F OEM amplifier modules (p. 2-110); E-663 3-channel amplifier, bench-top (p. 2-136)		

Resolution of PI Piezo Nanopositioners is not limited by friction or stiction. Value given is noise equivalent motion with E-503 amplifier (p. 2-146)
Dynamic Operating Current Coefficient in µA per Hz and µm. Example: Sinusoidal scan of 50 µm at 10 Hz requires approximately 0.8 mA drive current.
Adapter cable with LEMO connectors for sensor and operating voltage available.

PicoCube™ XY Stage and XYZ Stage for AFM

High-Dynamics Nanoscanner for Scanning Probe Microscopy

P-363.2CD and .3CD (background) PicoCube™, high-performance piezo positioning- and scanning systems or AFM/STM and nanomanipulation. Smart media card for size comparison

- **Ultra-High-Performance Closed-Loop Scanner for AFM/SPM**
- **Compact Manipulation Tool for Bio/Nanotechnology**
- **Resonant Frequency 9.8 kHz**
- **Capacitive Sensors for Highest Accuracy**
- **Parallel-Motion Metrology for Automated Compensation of Guiding Errors**
- **50 Picometer Resolution**
- **5 x 5 x 5 µm Travel Range**
- **Vacuum-Compatible Versions**

The P-363 PicoCube™ XY/XYZ is an ultra-high-performance closed-loop piezo scanning system. Designed for AFM, SPM and nanomanipulation applications, it combines an ultra-low inertia, high-speed XY/XYZ piezo scanner with non-contact, direct-measuring, parallel-metrology capacitive feedback capable of 50 picometers resolution. On top of being extremely precise, the PicoCube™ system is also very small and rugged. Measuring only 30 x 30 x 40 mm (with removable top plate, 30 x 30 x 28 mm for XY version), it is easy to integrate in any scanning apparatus.

Application Examples

- Scanning microscopy (SPM)
- Biotechnology
- Micromanipulation
- Nanopositioning
- Nano-imprinting
- Nanometrology
- Nanolithography

SPM, AFM, STM, Nanolithography, Nanoimprinting, Nanometrology

The PicoCube™ was specifically developed to overcome the limitations of the open-loop scanners currently available for SPM, AFM and STM. In addition to these applications, the PicoCube™ is also the ideal scanning and manipulation tool for nanoimprinting, nanolithography, ultra-high-resolution, near-field, scanning optical microscopy and nanosurface-metrology applications.

Higher Precision Through Parallel-Motion Metrology w/ Capacitive Sensors

The PicoCube™ is based on a proprietary, ultra-fast, piezo-driven scanner design equipped with direct-measuring, capacitive position sensors (parallel metrology). Unlike conventional sensors, they measure the actual distance between the fixed frame and the moving part of the stage. This results in higher-motion linearity, long-term stability, phase fidelity, and—because external disturbances are seen by the sensor immediately—a stiffer, faster-responding servo-loop.

Multi-axis nanopositioning systems equipped with parallel direct metrology are able to measure the platform position in all degrees of freedom against one fixed reference. In such systems, undesirable motion from one actuator in the direction of another (cross-talk) is detected immediately and actively compensated by the servo-loops. This Active Trajectory Control Concept can keep deviation from a trajectory to under a few nanometers, even in dynamic operation.

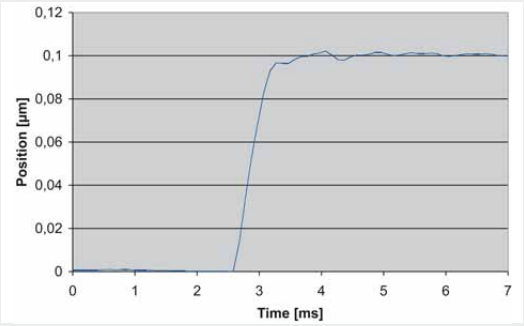

The P-363 settles to within 1 nm in 1 ms (100 nm step, X and Y motion; faster response in Z)

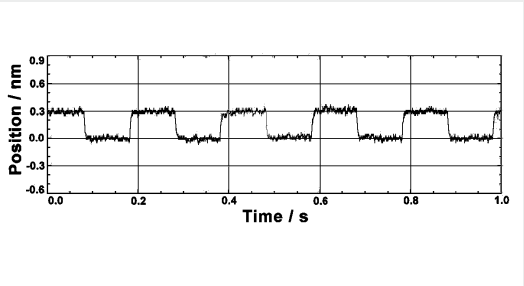

300 picometer steps (0.3 nm) performed with the P-363, measured with an external high-resolution, capacitive measurement system

Nanometer Accuracy in 1 Millisecond with 30-Picometer Resolution

PicoCube™ systems provide resolution of 30 picometers and below. The ultra-fast XY/XYZ piezo drives offer resonant frequencies of 9.8 kHz in Z and >3 kHz in X and Y! The high resonant frequency and high-bandwidth capacitive feed back allow step and settle to 1% accuracy in as little as one millisecond.

Rugged Design

In spite of its ability to move and position on an atomic scale, the PicoCube™ boasts a rugged design for real-world applications. For extra-high stability and reduced mass, the body is precision machined from heat-treated and stress-relieved titanium. The sophisticated frictionless design also ensures that the (moving) top plate protects the internal actuator/sensor unit from contamination.

Controller

For dynamic scanning opera - tion the E-725.3CM high-power digital controller offers advanced linearization algorithms for sub-nanometer precision (see p. 2-126).

Alternatively the analog E-536 PicoCube™ controller (see p. 2-134) comes in different versions optimized for resolution or power . An optional E-517 24-bit interface module is also available (see p. 2-156).

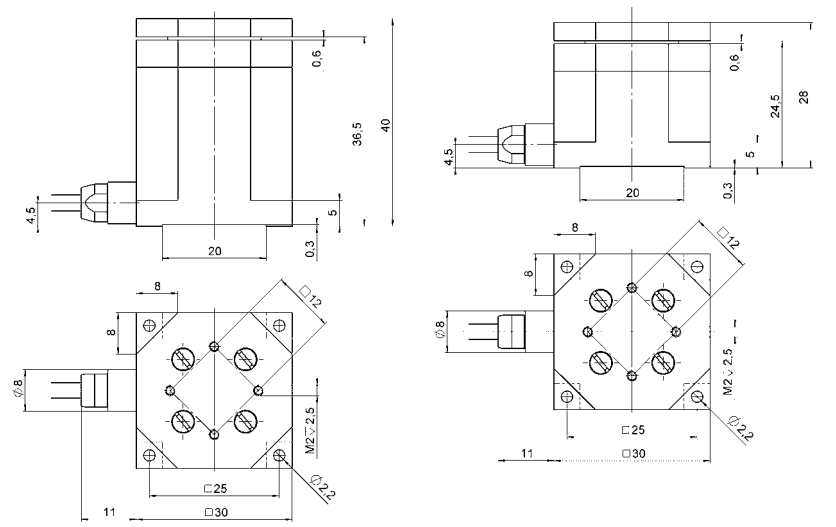

P-363.3Cx dimensions in mm. Removable top plate

P-363.2Cx dimensions in mm. Removable top plate

Technical Data

Model	P-363.3CD	P-363.2CD	Units
Active axes	X, Y, Z	X, Y	
Motion and positioning			
Integrated sensor	Capacitive	Capacitive	
Open-loop travel X, Y, -250 to +250 V	±3	±3	µm
Open-loop travel, -250 to +250 V	±2.7	–	µm
Closed-loop travel X, Y	±2.5	±2.5	µm
Closed-loop travel	±2.5	–	µm
Open-loop resolution	0.03*	0.03*	nm
Closed-loop resolution	0.1	0.1nm	
Linearity	0.05	0.05	%
Repeatability	1**	1**	nm
Pitch / yaw in X, Y	0.5	0.5	µrad
Runout X, Y (Z motion)	0.2	–	µrad
Straightness in X, Y	3	3	nm
Flatness in X, Y	<10	<10	nm
Crosstalk X, Y (Z motion)	5	–	nm
Mechanical properties			
Unloaded resonant frequency in X, Y	3.1	4.2	kHz
Unloaded resonant frequency (Z)	9.8	–	kHz
Resonant frequency in X, Y	1.5 (20 g)	2.1 (20 g)	kHz
Load capacity	10	10	N
Ceramic type	PICA™, PICA™ Shear	PICA™ Shear	
Miscellaneous			
Operating temperature range	-20 to 80	-20 to 80	°C
Material	Titanium	Titanium	
Dimensions	30 x 30 x 40	30 x 30 x 28	mm
Mass	225	190	g
Cable length	1.5	1.5	m
Sensor / voltage connection***	Sub-D connector PicoCube™	Sub-D connector PicoCube™	
Recommended controller	E-536 PicoCube™ Controller	E-536 PicoCube™ Controller	

Resolution of PI Piezo Nanopositioners is not limited by friction or stiction. V alue given is noise equivalent motion with E-536 controller (p. 2-134)

*With E-536.3xH Controller

**for 10% travel in Z; 50 nm for 100 % travel in Z

***P-363.xCL versions with LEMO connectors

System properties

System configuration	P-363.3CD (Z-axis) with 20 g load and E-536 servo controller
Settling time	(10 % step width) 1 ms

PIHera ® XY Stage and XYZ Stage with Piezo Flexure Drive

High-Precision Nanopositioner Family–Compact and Long Travel Ranges

PIHera® XY nanopositioning systems provide travel ranges from 50 x 50 µm to 1800 x 1800 µm

- **Travel Ranges 50 to 1800 µm**
- **High-Precision, Cost-Efficient**
- **Resolution to 0.1 nm**
- **Frictionless, High-Precision Flexure Guiding System**
- **0,02 % Positioning Accuracy**
- **Outstanding Lifetime Due to PICMA® Piezo Actuators**
- **X-, XY-, Z- and XYZ-Versions**
- **Vacuum-Compatible Versions Available**

Two-axis (XY) PIHera® systems are piezo-nanopositioning stages featuring travel ranges from 50 to 1800 µm. Despite the increased travel ranges, the units are extremely compact and provide rapid response and high guiding precision. This, and the long travel range is achieved with a friction-free and extremely stiff flexure system sub-nanometer resolution. The PIHera® piezo nanopositioning series also includes Z and X stages (see p. 2-22 and p. 2-40).

Application Examples

- Interferometry
- Microscopy
- Nanopositioning
- Biotechnology
- Quality assurance testing
- Semiconductor technology

Nanometer Precision in Milliseconds

One of the advantages of PIHera® stages over motor-driven positioning stages is the rapid response to input changes and the fast and precise settling behavior. The P-622.1CD, for example, can settle to an accuracy of 10 nm in only 30 msec (other PI stages provide even faster response)!

Superior Accuracy With Direct-Metrology Capacitive Sensors

A choice of tasks such as optical path adjustment in interferometry, sample positioning in microscopy, precision alignment or optical tracking require the relatively long scanning ranges and nanometer precision offered by PIHera® nanopositioning stages.

PI's proprietary capacitive sensors measure position directly and without physical contact. They are free of friction and hysteresis, a fact which, in combination with the positioning resolution of well under 1 nm, makes it possible to achieve very high levels of linearity. A further advantage of direct metrology with capacitive sensors is the high phase fidelity and the high bandwidth of up to 10 kHz.

Designed for Precision

High stiffness is achieved with the FEA-optimized design of the frictionless flexure elements, which assure excellent guiding accuracy and dynamics. A straightness and flatness in the nanometer range is achieved.

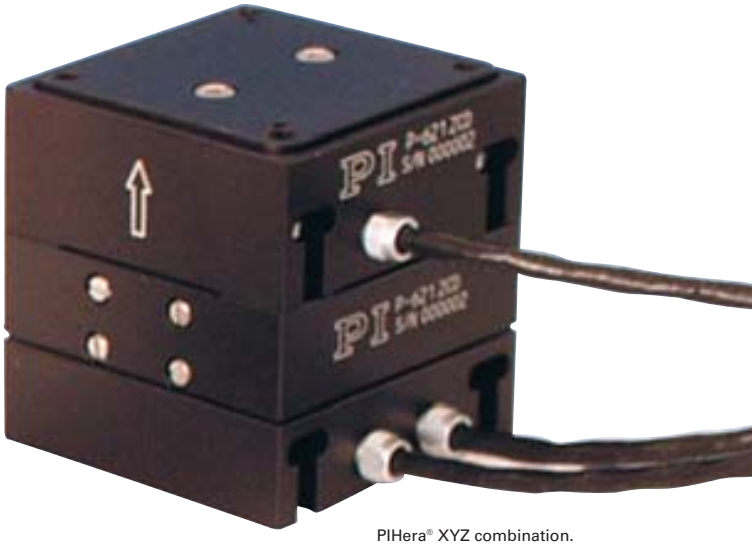

PIHera® XYZ combination.

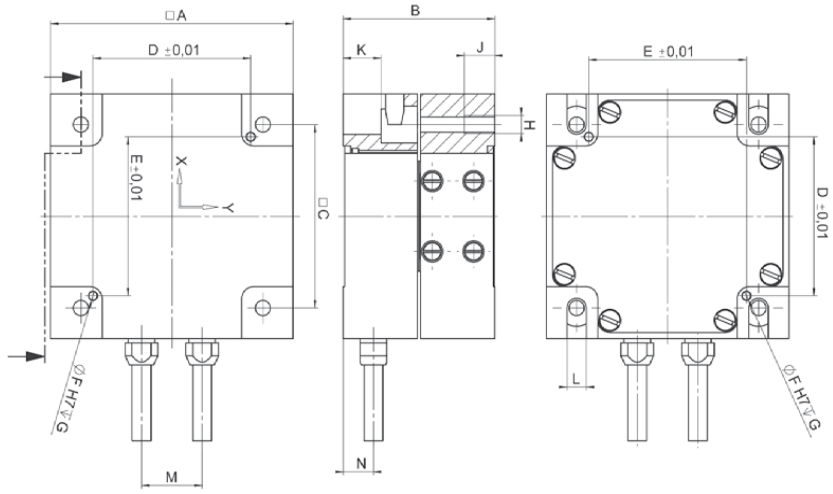

	A	B	C	D	E	∅F	G	H	J	K	L	M	N
P-620.2CD /20L	30	21,5	24	24	19	1,01	1,5	M2	3,5	5,1	2,2	9	6
P-621.2CD / 20L	40	25	30	26	26	1,51	2,5	M3	5	6,25	3,2	10	5
P-622.2CD / 20L	50	25	40	35	35	1,51	2,5	M3	5	6,25	3,2	11	5
P-625.2CD / 20L	60	25	50	46	46	1,51	2,5	M3	6	6,25	3,2	11	5
P-628.2CD / 20L	80	30	70	66	66	1,51	2,5	M3	6	6,75	3,2	11	5
P-629.2CD / 20L	100	40	90	82	82	2,01	3,5	M4	7	9,75	4,3	16	7,5

P-62x.2CD/.2CL/.20L dimensions in mm

Technical Data

Model	P-620.2CD/ P-620.2CL	P-621.2CD/ P-621.2CL	P-622.2CD/ P-622.2CL	P-625.2CD/ P-625.2CL	P-628.2CD/ P-628.2CL	P-629.2CD P-629.2CL	P-62x.20L open-loop versions	Units	Tolerance
Active axes	X, Y	X, Y	X, Y	X, Y	X, Y	X, Y	X, Y		
Motion and positioning									
Integrated sensor	Capacitive	Capacitive	Capacitive	Capacitive	Capacitive	Capacitive	–		
Open-loop travel X, Y, -20 to +120 V	60	120	300	600	950	1800	as P-62x.2CD	µm	min. (+20 %/-0 %)
Closed-loop travel	50	100	250	500	800	1500	–	µm	
Open-loop resolution	0.1	0.2	0.4	0.5	0.5	2	as P-62x.2CD	nm	typ.
Closed-loop resolution	0.2	0.4	0.7	1.4	3.5	3.5	–	nm	typ.
Linearity	0.02	0.02	0.02	0.03	0.03	0.03	–	%	typ.
Repeatability	±2	±2	±2	±5	±10	±14	as P-62x.2CD	nm	typ.
Pitch / yaw	±3	±3	±3	±3	±20	±30	as P-62x.2CD	µrad	typ.
Mechanical properties									
Stiffness	0.22	0.25	0.2	0.1	0.05	0.1	as P-62x.2CD	N/µm	±20 %
Unloaded resonant frequency in X,	575	420	225	135	75	60	as P-62x.2CD	Hz	±20 %
Unloaded resonant frequency in Y	800	535	300	195	105	100	as P-62x.2CD	Hz	±20 %
Resonant frequency in X @ 50 g	270	285	180	120	60	55	as P-62x.2CD	Hz	±20 %
Resonant frequency in Y @ 50 g	395	365	215	150	85	85	as P-62x.2CD	Hz	±20 %
Resonant frequency in X @ 100 g	285	220	160	105	55	50	as P-62x.2CD	Hz	±20 %
Resonant frequency in Y @ 100 g	300	285	175	125	75	80	as P-62x.2CD	Hz	±20 %
Push/pull force capacity in motion direction	10 / 5	10 / 8	10 / 8	10 / 8	10 / 8	10 / 8	as P-62x.2CD	N	Max.
Load capacity	10	10	10	10	10	10	as P-62x.2CD	N	Max.
Lateral Force	10	10	10	10	10	10	as P-62x.2CD	N	Max.
Drive properties									
Ceramic type	PICMA® P-883	PICMA® P-885	PICMA® P-885	PICMA® P-885	PICMA® P-887	PICMA® P-888	as P-62x.2CD		
Electrical Capacitance	0.35	1.5	3.1	6.2	19	52	as P-62x.2CD	µF	±20 %
Dynamic operating current coefficient	0.9	1.9	1.9	1.6	3	4.3	as P-62x.2CD	µA/(Hz•µm)	±20 %
Miscellaneous									
Operating temperature range	-20 to 80	-20 to 80	-20 to 80	-20 to 80	-20 to 80	-20 to 80	-20 to 150	°C	
Material	Aluminum	Aluminum	Aluminum	Aluminum	Aluminum	Aluminum	Aluminum		
Mass	0.195	0.295	0.348	0.43	0.7	1.37	as P-62x.2CD	kg	±5 %
Cable length	1.5	1.5	1.5	1.5	1.5	1.5	1.5	m	±10 mm
Sensor / voltage connection	CD version: 2x Sub-D special CL version: LEMO	CD version: 2x Sub-D special CL version: LEMO	CD version: 2x Sub-D special CL version: LEMO	CD version: 2x Sub-D special CL version: LEMO	CD version: 2x Sub-D special CL version: LEMO	CD version: 2x Sub-D special CL version: LEMO	2x LEMO (no sensor)		

Lower axis: X; upper axis: Y.
Resolution of PI Piezo Nanopositioners is not limited by friction or stiction. The value given is noise equivalent motion with E-710 controller (p. 2-128)
Recommended controller
CD version: E-610 servo controller / amplifier (p. 2-110), E-625 servo controller, bench-top (p. 2-114), E-665 powerful servo controller, bench-top (p. 2-116)
Multi-channel digital controllers: E-710 bench-top (p. 2-128), E-712 modular (p. 2-140), E-725 high-power (p. 2-126), E-761 PCI board (p. 2-140)
CL version: E-500 modular piezo controller system (p. 2-142) with E-505 amplifier module (1 per axis, high power) (p. 2-147) and E-509 controller (p. 2-152)
Open-loop versions: E-500 modular piezo controller system (p. 2-142) with E-505 amplifier module (1 per axis, high power) (p. 2-147)

P-733 XY Stage and XYZ Stage with Piezo Flexure Drive

High-Precision XY(Z) Scanner Family with Aperture

P -733.3 DD (left) and P -733.2 DD, high-speed, direct drive XY(Z) scanning stages are the fastest scanning stages with large aperture currently available (2.2 kHz resonant frequency!). Both units feature a footprint of only 100 x 100 mm. CD for size comparison.

- **Travel Ranges to 100 x 100 µm in X,Y & to 10 µm in Z**
- **Resolution to 0.1 nm with Capacitive Sensors**
- **High-Speed Versions with Direct Drive**
- **Vacuum and Non-Magnetic Versions**
- **Parallel Kinematics for Better Multi-Axis Accuracy and Dynamics**
- **Parallel Metrology for Active Trajectory Control**
- **Frictionless, High-Precision Flexure Guiding System**
- **Clear Aperture 50 x 50 mm for Transmitted-Light Applications**

P-733 XY and XYZ piezo driven stages are fast and highly accurate nanopositioning and scanning systems. They provide a positioning and scanning range of 100 x 100 (x10) µm together with sub-nanometer resolution and are equipped with parallel-metrology capacitive position feedback for superior multi-axis linearity and repeatability. The guiding accuracy minimizes runout to under 10 nm over the whole travel range. In addition, the high-speed Z-axis of the P-733.3CD can actively compensate any out-of-plane Z-axis deviation during XY motion.

Application Examples

- Image processing / stablilization
- Scanning microscopy
- Surface inspection
- Metrology / interferometry
- Biotechnology
- Semiconductor testing
- Mask / wafer positioning
- Micromanipulation
- Nanopositioning with high flatness & straightness

Fastest Multi-Axis Systems / Direct Drive, Low Profile and Large Apertures

P-733.2DD / .3DD multi-axis piezo nanopositioning systems are the fastest ultra-high-precision, open-frame stages for scanning microscopy. They provide a positioning and scanning range of 30 x 30 (x10) µm. P-733 nanopositioning and scanning stages feature very low profiles, as low as 20 mm (0.8 inch). The novel, high-stiffness direct drive gives the systems resonant frequencies as high as 2.2 kHz (4 x that of other comparable systems), enabling millisecond scanning rates with sub-nanometer resolution.

Parallel-Kinematics / Metrology for Enhanced Responsiveness

In a parallel kinematics multi-axis system, all actuators act directly on one moving platform. This means that all axes move the same minimized mass and can be designed with identical dynamic properties. Multi-axis nanopositioning systems equipped with both parallel kinematics and parallel, direct metrology are able to measure platform position in all degrees of freedom against one common fixed reference. In such systems, undesirable motion from one actuator in the direction of another (cross talk) is detected immediately and actively compensated by the servo-loops.

Capacitive Sensors for Subnanometer Resolution

PI's proprietary capacitive sensors measure position directly and without physical contact. They are free of friction and hysteresis, a fact which, in combination with the positioning resolution of well under 1 nm, makes it possible to achieve very high levels of linearity. A further advantage of direct metrology with capacitive sensors is the high phase fidelity and the high bandwidth of up to 10 kHz. The closed-loop resolution is 0.3 nm for the X and Y axes and 0.2 nm for the optional Z-axis. The direct drive versions are rated to 0.1 nm resolution for every axis.

Large Variety of Models for a Broad Range of Applications

For Z-axis scanning applications, the P-733.ZCD (see p. 2-42) version is available with a travel range of 100 µm. For ultra-high-vacuum applications down to 10^{-9} hPa, nanopositioning systems as well as comprehensive accessories, such as suitable feedthroughs, are available.

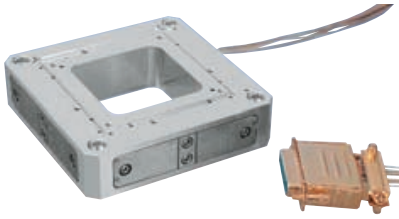

P-733.2UD non-magnetic XY scanning stage for UHV to 10^{-9} hPa

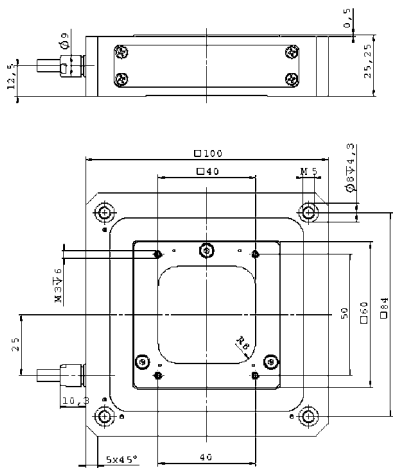

P-733.3 dimensions in mm

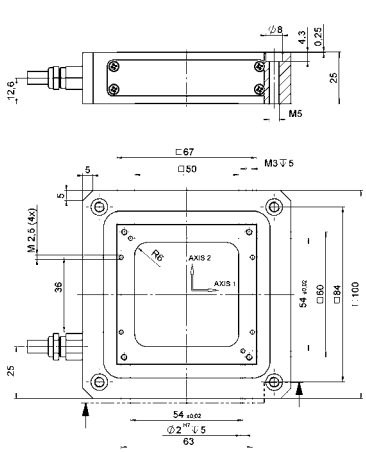

P-733.2 dimensions in mm

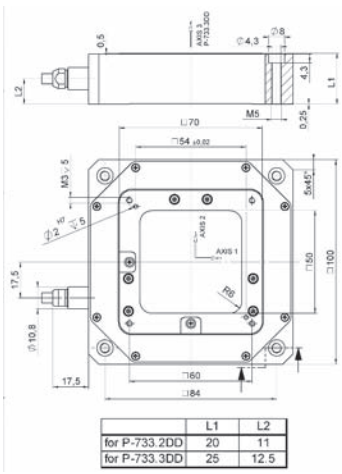

	L1	L2
for P-733.2DD	20	11
for P-733.3DD	25	12.5

P-733.xDD dimensions in mm

Technical Data

Model	P-733.2CD P-733.2CL	P-733.3CD P-733.3CL	P-733.2DD	P-733.3DD	Units	Tolerance
Active axes	X, Y	X, Y, Z	X, Y	X, Y, Z		
Motion and positioning						
Integrated sensor	Capacitive	Capacitive	Capacitive	Capacitive		
Open-loop travel, -20 to +120 V	115 x 115	115 x 115 x 12	33 x 33	33 x 33 x 14	µm	min. (+20 %/-0 %)
Closed-loop travel	100 x 100	100 x 100 x 10	30 x 30	30 x 30 x 10	µm	
Open-loop resolution	0.2	0.2 (0.1 in Z)	0.1	0.1	nm	typ.
Closed-loop resolution	0.3	0.3 (0.2 in Z)	0.1	0.1	nm	typ.
Linearity (X, Y)	0.03	0.03	0.03*	0.03*	%	typ.
Linearity (Z)	–	0.03	–	0.03*	%	typ.
Repeatability (X, Y)	<2	<2	<2	<2	nm	typ.
Repeatability (Z)	–	<1	–	<1	nm	typ.
Pitch (X,Y)	<±3	<±3	<±5	<±5	µrad	typ.
Yaw (X, Y)	<±10	<±10	<±10	<±10	µrad	typ.
Runout θZ (motion in Z)		<±5		<±5	µrad	typ.
Mechanical properties						
Stiffness	1.5	1.4 (9 in Z)	20	4 (10 in Z)	N/µm	±20 %
Unloaded resonant frequency	500	460 (1400 in Z)	2230	1200 (1100 in Z)	Hz	±20 %
Resonant frequency @ 120 g	370	340 (1060 in Z)	-	-	Hz	±20 %
Resonant frequency @ 200 g	340	295 (650 in Z)	1550	530 (635 in Z)	Hz	±20 %
Push/pull force capacity in motion direction	50/20	50/20	50/20	50/20	N	Max.
Drive properties						
Ceramic type	PICMA® P-885	PICMA® P-885	PICMA® P-885	PICMA® P-885		
Electrical capacitance	6	6 (2.4 in Z)	6.2	6.2 (3.3 in Z)	µF	±20 %
Dynamic operating current coefficient	7.5	7.5 (30 in Z)	25	25 (41 in Z)	µA	(Hz • µm) ±20 %
Miscellaneous						
Operating temperature range	-20 to 80	-20 to 80	-20 to 80	-20 to 80	°C	
Material	Aluminum	Aluminum	Aluminum	Aluminum		
Mass	0.58	0.675	0.58	0.675	kg	±5 %
Cable length	1.5	1.5	1.5	1.5	m	±10 mm
Sensor/ voltage connection	Sub-D special (CD-version) LEMO (CL-version)	Sub-D special (CD-version) LEMO (CL-version)	Sub-D special	Sub-D special		

*With digital controller. Non-linearity of direct drive stages measured with analog controllers is up to 0.1 % typ.

Recommended controller: Single-channel (1 per axis): E-610 servo controller / amplifier (p. 2-110), E -625 servo controller, bench-top (p. 2-114), E-621 controller module (p. 2-160) Multi-channel: modular piezo controller system E-500 (p. 2-142) with amplifier module E-503 (three channels) (p. 2-146) or E-505 (1 per axis, high-power) (p. 2-147) and E-509 controller (p. 2-152) Multi-channel digital controllers: E-710 bench-top (p. 2-128), E-712 modular (p. 2-140), E-725 high-power (p. 2-126), E-761 PCI board (p. 2-130)

Plano™ XY & XYZ Microscope Stage with Piezo Drive

Low-Profile, Low-Cost Nanopositioning Systems for Super-Resolution Microscopy

PI nano™ series nanopositioning stages feature a very low profile of 20 mm (0.8), a large aperture for 3 x 1'' slides and deliver highly accurate motion with sub-nanometer resolution in up to 3 axes. Slide / petri dish holders optional

- **Low Profile for Easy Integration: 20 mm (0.8")**
- **Up to 200 x 200 x 200 µm Travel Ranges**
- **Large Clear Aperture for 3 x 1" Slides**
- **Recessed Sample Holders for Maximized Utility Available**
- **Outstanding Lifetime Due to PICMA®Piezo Actuators**
- **Cost-Effective Design due to Piezoresistive Sensors**
- **Compatible w/ Leading Image Acquisition Software Package**
- **Closed-Loop Control for High Repeatability and Accuracy**
- **Millisecond Step Time, Ideal for Super-Resolution Microscopy**
- **24-Bit Controller w/ USB, Ethernet, RS-232 Interface and Analog Control**
- **Available Manual Long-Travel Stage with Motor Upgrade Option**

Long Travel, Low Profile, Optimized for Microscopy

PI nano™ XY and XYZ low-profile piezo scanning stages are optimized for easy integration into high-resolution microscopes. They feature a very low profile of 20 mm (0.8") and a large aperture designed to hold Petri dishes and standard slide holders. The long travel ranges of up to 200 x 200 x 200 µm with nanometer closed-loop resolution are ideal for leading-edge microscopy and imaging applications.

Cost Effective Design, High Performance

PI nano™ series piezo positioning stages are designed to provide high performance at minimum cost. For highly-stable, closed loop operation, piezoresistive sensors are applied directly to the moving structure and precisely measure the displacement of the stage platform. The very high sensitivity of these sensors provides optimum position stability and responsiveness as well as nanometer resolution. A proprietary servo controller significantly improves the motion linearity compared to conventional piezoresistive sensor controllers.

High Reliability and Long Lifetime

The compact P-545 systems are equipped with preloaded PICMA® high-performance piezo actuators which are integrated into a sophisticated, FEA-modeled, flexure guiding system. The PICMA® actuators feature cofired ceramic encapsulation and provide better performance and reliability than conventional piezo actuators. Actuators, guidance and sensors are maintenance-free, not subject to wear and offer extraordinary reliability.

Application Examples

- Super-resolution microscopy
- 3D Imaging
- Laser technology
- Interferometry
- Metrology
- Biotechnology
- Screening
- Micromanipulation

Background: the piezo controller is included and comes with a 24-bit resolution USB port as well as ethernet, RS-232 and analog interface. Foreground: The optional M-545 manual XY stage provides a stable platform for the PI nano™ piezo stages. Custom stage version shown

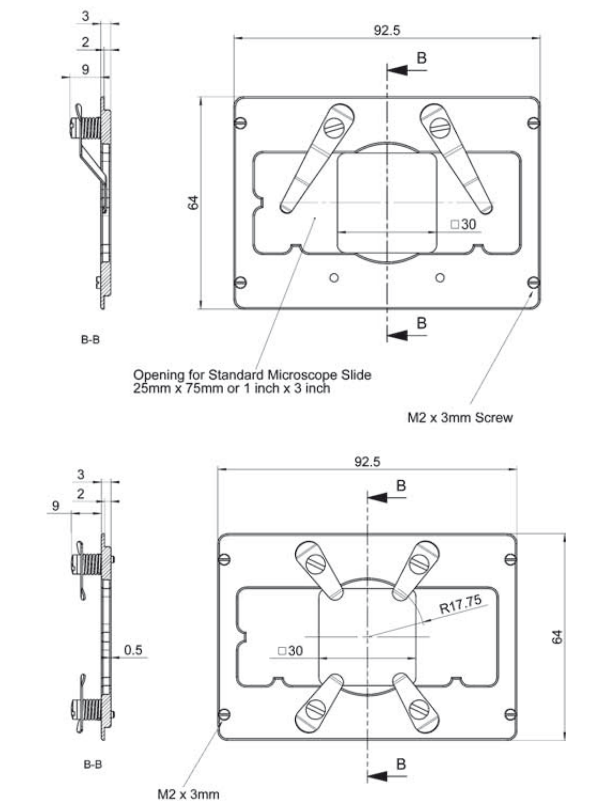

Accessories: Slide holder (above) and Petri dish holder (below), dimensions in mm

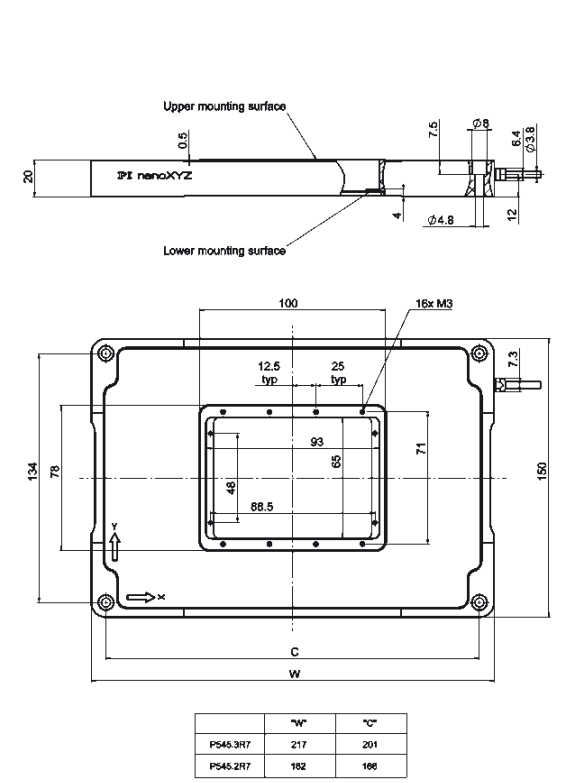

	"W"	"C"
P545.3R7	217	201
P545.2R7	182	166

P-545 dimensions in mm

Technical Data

Model	P-545.2R7	P-545.3R7	Unit	Tolerance
Active axes	X, Y	X, Y, Z		
Motion and positioning				
Integrated sensor	piezoresistive	piezoresistive		
Closed-loop travel	200 x 200	200 x 200 x 200	µm	
Closed-loop resolution*	1	1	nm	typ.
Linearity	±0.1	±0.1	%	typ.
Repeatability	< 5	< 5	nm	typ.
Mechanical properties				
Push/pull force capacity	100 / 30	100 / 30	N	max.
Load	50	50	N	max.
Drive properties				
Ceramic type	PICMA® P-885	PICMA® P-885		
Electrical capacitance	6	6 (X, Y), 12 (Z)	µF	±20%
Miscellaneous				
Operating temperature range	-20 to 80	-20 to 80	°C	
Material	Aluminum	Aluminum		
Mass	1	1.2	kg	±5%
Cable length	1.5	1.5	m	±10 mm
Sensor / voltage connection	Sub-D, 25 pin	Sub-D, 25 pin		
Piezo controller (included in delivery)	E-545	E-545		

* Resolution of PI Piezo Nanopositioners is not limited by friction or stiction. Value given is noise equivalent motion measured with interferometer.

M-663 PILine® Linear Motor Stage: XY Stage Combinations

Compact, Fast, with Ultrasonic Piezo Linear Drives, Direct Position Measurement

XY combination of two M-663s; CD for size comparison

- **Smallest Translation Stage with Closed-Loop Linear Motor and Encoder**
- **Travel Range 19 mm**
- **Max. Velocity 400 mm/s**
- **Acceleration up to 10 g**
- **Direct Metrology Linear Encoder**
- **0.1 µm Resolution**
- **XY Combination Possible**
- **Vacuum-Compatible Versions Available**

PILine® M-663 micropositioning systems offer high velocities of up to 400 mm/s and travel ranges of 19 mm in a compact package. The M-663 is the smallest closed-loop translation stage with piezomotor drives currently on the market. Its square footprint makes it suitable for use in compact XY configurations.

Application Examples

- Biotechnology
- Micromanipulation
- Microscopy
- Quality assurance testing
- Metrology
- Mass storage device testing
- R&D
- Photonics packaging

Working Principle

PILine® motors have a new, patented, ultrasonic drive developed by PI. The core piece of the system is a piezoceramic plate, which is excited to produce high-frequency eigenmode oscillations. A friction tip attached to the plate moves along an inclined linear path at the eigenmode frequency. Through its contact with the friction bar, the moving part of the mechanics drives forward or backwards. With each oscillatory cycle, the mechanics executes a step of a few nanometers; the macroscopic result is smooth motion with a virtually unlimited travel range.

Advantages of PILine® Micropositioning Systems

The ultrasonic piezoceramic drives used in PILine® micropositioners have a number of advantages over classical drives:

- Higher Accelerations, up to 5 g
- Speeds up to 500 mm/s
- Small Form Factor
- Self-Locking When Powered Down
- No Shafts, Gears or Other Rotating Parts
- Non-Magnetic and Vacuum-Compatible Drive Principle

Optimized Controller and Drive Electronics

PILine® motors require a special drive electronics to generate the ultrasonic oscillations for piezoceramic element. For optimum performance the highly specialized C-867 (see p. 4-116) motion controller is recommended. This sophisticated controller also inte-grates the drive electronics. Furthermore, the controller has a number of special features, including dynamic parameter switching for an optimized high-speed motion and settling behavior to take into account the motion characteristics typical of piezomotors. The broad-band encoder input (50 MHz) supports the outstanding high accelerations and velocities of PILine® drives at high resolutions.

Optionally, for use with third party servo controllers, the C-185 analog drive electronics (stand-alone unit) is available. It controls the motor speed by an analog ±10 V signal. For optimum performance the driver must be tuned together with the mechanics and should be ordered at the same time as the motor/stage.

Note

The products described in this document are in part protected by the following patents:
US Pat. No. 6,765,335
German Patent No. 10154526

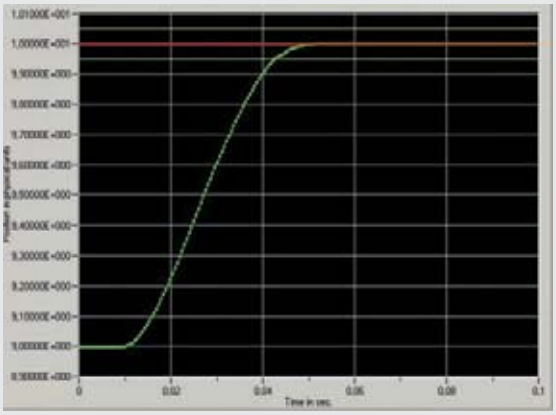

A 1 mm step performed by an M-663 stage with 300 g load controlled by a C-867 controller/driver reaches the end position in less than 40 ms

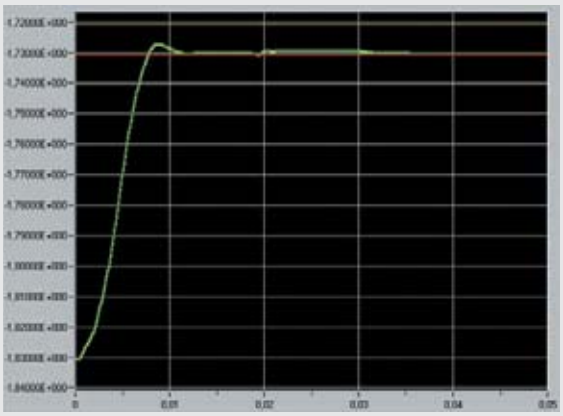

An M-663 with 100 g load settles to 0.1 µm accuracy in 10 ms after a 100 µm step, measured with C-867 controller/driver

Technical Data

Model	M-663.465	Units	Tolerance
Active axes	X		
Motion and positioning			
Travel range	19	mm	
Integrated sensor	Linear encoder		
Sensor resolution	0.1	µm	
Min. incremental motion	0.1	µm	typ.
Bidirectional repatability	±0.3	µm	typ.
Unidirectional repeatability	0.2	µm	typ.
Pitch	300	µrad	typ.
Yaw	300	µrad	typ.
Max. velocity	400	mm/s	
Reference switch repeatability	1	µm	typ.
Mechanical properties			
Max. load	5	N	
Max. push/pull force	2	N	
Max. holding force	2	N	
Drive properties			
Motor type	P-661 PILine® ultrasonic piezomotor		
Motor voltage range	120 (peak-peak)* 42 (RMS)*	 V	
Electrical power	5**	W	nominal
Current	400**	mA	
Reference switch	Hall-effect		
Miscellaneous			
Operating temperature range	-20 to +50	°C	
Material	Al (black anodized)		
Dimensions	35 x 35 x 15	mm	
Mass	40	g	±5 %
Cable length	1.5	m	±10 mm
Connector	MDR, 14-pin		
Recommended controller/driver	C-867.161 Single-axis controller/driver (p. 4-116) C-185.161 Drive electronics (p. 1-36)		

*Power is supplied by the drive electronics which runs on 12 V DC
**For drive electronics

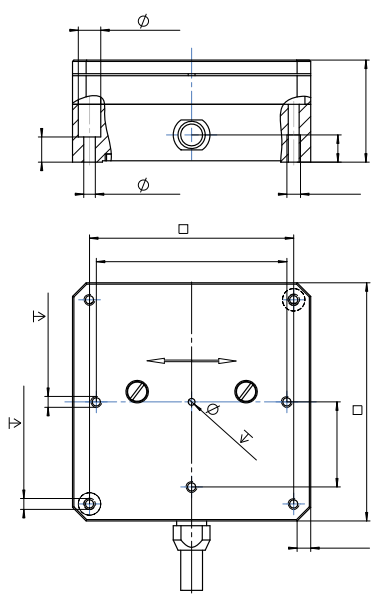

M-663
dimensions in mm

Request the 530 p Hardbound Catalog

Call or go to: http://www.pi.ws

Headquarters

GERMANY

Physik Instrumente (PI) GmbH & Co. KG
Auf der Römerstraße 1
76228 Karlsruhe
Tel: +49 (721) 4846-0
Fax: +49 (721) 4846-100
info@pi.ws · www.pi.ws

PI Ceramic GmbH
Lindenstraße
07589 Lederhose
Tel: +49 (36604) 882-0
Fax: +49 (36604) 882-25
info@piceramic.de
www.piceramic.de

Subsidiaries

USA (East) & CANADA

PI (Physik Instrumente) L.P.
16 Albert St.
Auburn, MA 01501
Tel: +1 (508) 832 3456
Fax: +1 (508) 832 0506
info@pi-usa.us
www.pi-usa.us

USA (West) & MEXICO

PI (Physik Instrumente) L.P.
5420 Trabuco Rd., Suite 100
Irvine, CA 92620
Tel: +1 (949) 679 9191
Fax: +1 (949) 679 9292
info@pi-usa.us
www.pi-usa.us

JAPAN

PI Japan Co., Ltd.
2-38-5 Akebono-cho
Tachikawa-shi
Tokyo 190-0012
Tel: +81 (42) 526 7300
Fax: +81 (42) 526 7301
info@pi-japan.jp
www.pi-japan.jp

PI Japan Co., Ltd.
Hanahara Dai-ni-Building #703
4-11-27 Nishinakajima,
Yodogawa-ku, Osaka-shi
Osaka 532-0011
Tel: +81 (6) 6304 5605
Fax: +81 (6) 6304 5606
info@pi-japan.jp
www.pi-japan.jp

CHINA

Physik Instrumente (PI Shanghai) Co., Ltd.
Building No. 7-301
Longdong Avenue 3000
201203 Shanghai, China
Tel: +86 (21) 687 900 08
Fax: +86 (21) 687 900 98
info@pi-china.cn
www.pi-china.cn

UK & IRELAND

PI (Physik Instrumente) Ltd.
Trent House
University Way,
Cranfield Technology Park,
Cranfield,
Bedford MK43 0AN
Tel: +44 (1234) 756 360
Fax: +44 (1234) 756 369
uk@pi.ws
www.physikinstrumente.co.uk

FRANCE

PI France S.A.S.
244 bis, avenue
Max Dormoy
92120 Montrouge
Tel: +33 (1) 55 22 60 00
Fax: +33 (1) 41 48 56 62
info.france@pi.ws
www.pifrance.fr

ITALY

Physik Instrumente (PI) S.r.l.
Via G. Marconi, 28
20091 Bresso (MI)
Tel: +39 (02) 665 011 01
Fax: +39 (02) 610 396 56
info@pionline.it
www.pionline.it